MINNESOTA COMMERCIAL KITCHEN
Ventilation Guidelines

Ventilation Committee of the Inter-Agency Review Council

FOURTH EDITION

TABLE OF CONTENTS

INTRODUCTION 5
PREFACE 6
Mission Statement of the IARC Ventilation Committee 6
VENTILATION COMMITTEE MEMBERS 7
VENTILATION TERMS & DEFINITIONS 8
GENERAL PRINCIPLES OF VENTILATION FOR FOOD ESTABLISHMENTS 11
- Design Criteria 12
- Hoods 13
- Side Curtains 16
- Grease Filters and Grease Extractors 16
- Ductwork 17
- Capture Velocity 17
- Exhaust Fans 18
- Make-Up Air 18
- 16 Signs that an Area is Starving for Make-Up Air 20
- Determining Exhaust Quantities 21
- Airflow Resistance 22
- Methods of Airflow Measurements 22
- Testing and Balancing 22

TYPE I VS. TYPE II HOOD SYSTEMS 23
MINNESOTA STATE MECHANICAL CODE SUMMARY 24
- Ducts 24
- Hoods 25
- Filters 25
- Make-Up Air 26
- Testing 26
- Fire Protection Equipment 26

ANSI/NSF INTERNATIONAL STANDARD NO. 2 27
COMMERCIAL KITCHEN VENTILATION CHECKLIST 28
VENTILATION-RELATED ILLNESSES AND CONDITIONS 29
EVALUATION RECIRCULATING HOOD SYSTEMS 30
- Background 30
- Code References 32
- Criteria for Evaluation 32
- Use and Maintenance 33

GUIDANCE FOR VENTLESS DISHMACHINE 34
- Background 34
- Criteria for Evaluation 35
- Code References 35
- Use and Maintenance 35

UNIQUE CONSIDERATIONS FOR SOLID FUEL EQUIPMENT 36
MINNESOTA FIRE CODE 37
- Background 37
- Minnesota Uniform Fire Code and Commercial Kitchen Ventilation 37
- Suppression Systems 37
- A Temporary Cooking Operation 40
- Tableside Cooking Inside a Restaurant 40

MN STATE BUILDING CODE ADMINISTRATIVE AUTHORITY FOR CKV 42
KITCHEN VENTILATION ENERGY GUIDELINES 43
VENTILATED CEILINGS 44
VARIABLE EXHAUST SYSTEM 45
FREQUENTLY ASKED QUESTIONS AND ANSWERS 46
INSTRUCTIONS FOR USE OF FLOWCHART 51
COMMERCIAL KITCHEN VENTILATION FLOWCHART 54
EQUIPMENT CATEGORIES 55

Introduction

The purpose of these guidelines is to provide some general information about commercial kitchen ventilation (CKV) systems to food inspectors, environmental health specialists (sanitarians), food service equipment retailers and designers, architects, contractors and others in the food service industry.

This document is not a regulation, rule, or ordinance. It is intended to serve as a guide for the design, review, sizing, testing, and inspection of CKV systems. It is also intended to provide more uniformity in the application of CKV requirements by assisting in the decision process for the proper type of exhaust ventilation systems in food establishments. The reader is encouraged to consult with design, installation, and inspection specialists to ensure compliance with applicable building, mechanical, fire, and health codes.

It is intended to be used by both design professionals and regulatory authorities as a guide for determining the type of exhaust system required for various cooking or heating applications. Instructions on the use of the flow chart begin on page 51.

This is a living document and will be revised accordingly as the need presents itself. The current edition, including any revisions, will be on the IARC web-site, with links to the Minnesota Department's of Agriculture and Health.

Preface

These revised guidelines, 4th edition, were developed by the Ventilation Committee of the Inter-Agency Review Council (IARC). This committee was formed by the IARC to review technical issues relating to commercial kitchen ventilation (CKV) and to make recommendations to the IARC for their consideration and action. The committee consists of people with technical expertise in CKV issues from the State of Minnesota Department of Agriculture, Health, Labor and Industry (Building Codes), local environmental health agencies, building and fire code regulatory agencies, academia, and food service and ventilation industries.

Mission Statement of the IARC Ventilation Committee

To promote and encourage uniformity in regulation of ventilation standards and assure public health and safety through:

1. Review of proposed equipment and its application;
2. Recommendation of appropriate ventilation controls;
3. Interpretation of codes and standards; and
4. Recommendation of code changes to appropriate regulatory authorities.

Special Recognition

The ventilation committee would like to give special recognition to the following former committee member for his tremendous contributions over the years.

Bob Hart - formerly with St. Louis County Health. Bob Hart was a member of the ventilation committee from its inception and recently retired from government service.

Acknowledgements

The Ventilation Committee of the Inter-Agency Review Council (IARC) would like to especially thank the following persons and agencies for their valuable contributions to these guidelines:

Stacy Gulden and Kabao Her, Graphic Arts Specialist, Minnesota Department of Agriculture, Information Technology Division for layout and design development.

Equipment manufacturers for providing pictures of commercial kitchen appliances.

Local building and health officials, and ventilation industry for their peer review.

In accordance with the Americans with Disabilities Act, an alternative form of communication is available upon request. TDD: 1-800-627-3529. The MDA is an equal opportunity employer and provider.

IARC Ventilation Committee Members

NAME	AGENCY & ADDRESS	PHONE/FAX	E-MAIL
*Lorna Girard, R.S. *Supervisor*	MN Dept of Agriculture Dairy & Food Inspection Div. 625 Robert St N. St. Paul, MN 55155-2538	651-201-6591 651-201-6119 (fax) 651-239-9554 (cell)	lorna.girard@state.mn.us
Joe Hibberd, R.S *Environmental Health Specialist*	St. Paul-Ramsey Cty. Dept. of Public Health 2785 White Bear Av N., Suite 350 Maplewood, MN 55109-1320	651-266-1173 651-266-1177 (fax)	joe.hibberd@co.ramsey.mn.us
Richard Bruecker *Food Standards Compliance Officer*	MN Dept. of Agriculture Dairy & Food Inspection Div. 625 Robert St N St. Paul, MN 55155-2538	651-201-6214 651-201-6119 (fax)	richard.bruecker@state.mn.us
Vacancy	Outstate Local Health Agency		
Laura Huseby R.S. *EHS Plan Review*	MN Dept. of Health Envir. Health Services Section 625 Robert St. N St. Paul, MN 55164-0975	651-201-4512	laura.huseby@state.mn.us
Scott Nelson, P.E. *Mechanical Engineer*	MN Dept. of Labor & Industry 443 Lafayette Rd St. Paul, MN 55155-4341	651-284-5850 651-284-5749 (fax) 651-284-5865	scott.nelson@state.mn.us chris.meier@state.mn.us
Steven Diaz, R.S. *Sanitarian Supervisor*	MN Dept. of Health Envir. Health Services Section 625 Robert St. N St. Paul, MN 55164-0975	651-643-2167	steven.diaz@state.mn.us
Sherry Engelman, R.S. *Director*	City of Edina Health Dept. 4801 W. 50th Street Edina, MN 55424-1394	952-826-0464 925-826-0390 (fax)	sengelman@ci.edina.mn.us
Jason Forrest *Regional Sales Manager* *CaptiveAire, Inc.* *Commercial Ventilation*	11760 Justen Circle, Unit G Maple Grove, MN 55311	763-315-2990 919-747-5666 (fax)	jason.forrest@captiveaire.com
Jon Knudson *Building Official*	City of St. Paul, Dept. of Safety & Inspections 375 Jackson Street St. Paul, MN 55101-1806	651-266-9062 651-266-9099 (fax)	jon.knudson@ci.stpaul.mn.us
Rich Kukla *Principal*	Robert Rippe & Associates 6117 Blue Circle Dr., Suite 100 Minnetonka, MN 55343-9108	952-933-0313 952-933-9661 (fax)	rkukla@rrippe.com
Andy Thielen, P.E. *Professional Engineer*	Aei Andrew Engineering 4835 Terrace Circle Hermantown, MN 55811	218-729-9286 888-266-6480 (fax) 218-213-5449(cell)	andy.thielen@aeiduluth.com
Tom Froyum *Fire Sprinkler Inspector*	City of St. Paul, Dept. of Safety & Inspections 375 Jackson Street St. Paul, MN 55101-1806	651-266-8952	tom.froyum@ci.stpaul.mn.us
Industry Association	Vacant		
Jared Ellingson *Mechanical Inspector*	University of Minnesota Building Code Division 319 15th Ave. SE, #270 Minneapolis, MN 55455	612-624-9082	ellin281@umn.edu

* Committee Chair

VENTILATION TERMS AND DEFINITIONS

Anemometer (rotating vane or digital)
A device for measuring air velocity. A heated wire anemometer measures the resistance changes of a heated wire with temperature changes as air velocity varies. A rotating vane anemometer is used more commonly in large openings.

ANSI
American National Standards Institute

Authority Having Jurisdiction (AHJ)
The organization, office, or individual responsible for approving equipment, materials, an installation, or a procedure.

Back-drafting
A flow of combustion products in any direction opposite to normal flow in a vent stack.

Backshelf hood
Is also referred to as a low-proximity hood, a passover hood, a plate hood or a downdraft hood. Its front lower lip is set back a maximum of 12 inches from the leading edge of the cooking surface, and it is supported from above; sometimes used as island hoods when suspended over conveyor ovens.

Balance
Distributing the airflow throughout the exhaust ventilation system so that the static pressure in each duct meeting at a common junction is equal. The proper static pressure loss in ducts may be arrived at by: exhausting more air than is required through some hoods, reducing or increasing the size of branch ducts, and through use of adjustable dampers only if they are listed as fire dampers for such use or are part of a listed grease extractor.

BTUs
British Thermal Units, a British thermal unit is a unit of heat energy equal to the heat needed to raise the temperature of 1 pound of air-free water from 60 to 61 degrees Fahrenheit at a constant pressure of 1 standard atmosphere (1054.5 joules).

Canopy hood
A “receiving” type of hood that is positioned above the cooking equipment it serves to capture contaminants that rise or are thrown at it and which overhangs the cooking bank on all open sides.

Cap or eyebrow hood
A type of hood normally located on or above a pizza oven or rotisserie baking oven that overhangs the door opening.

Capture
The containment of the thermal plume containing contaminants that rises from heated processes in a kitchen such as cooking or dishwashing.

CFM
Cubic feet per minute

CKV
Commercial kitchen ventilation

Contaminated air
Air that contains unwanted by-products from commercial kitchen operation such as heat, grease, odors, smoke, water vapor, or combustion products.

Diffuser
A ceiling make-up air supply grille which is louvered to avoid drafts being directed onto workers.

Direct-fire MUA unit
A type of make-up air heater unit in which fuel is burned directly in the air stream and the products of combustion are released in the air supply.

Duct
A conduit used for conveying air at low pressures.

EPA
U.S. Environmental Protection Agency

EPA 202 test
A testing method for determining the amount of condensable particulate emissions from stationary sources. It is intended to represent condensable particulate matter as material that condenses after passing through a filter and as measured by this method.

Eyebrow hood
A type of hood mounted directly to the face of an appliance, such as an oven and dishwasher, above the opening or door from which effluent is emitted.

Exhausted vestibule
Stainless steel vent cowels located over a warewashing machine entrance and exit openings.

FPM
Feet per minute (air velocity)

Filter resistance
The pressure loss contributed by grease filters that must be overcome by the exhaust fan.

Friction loss
The total static pressure loss in a ventilation system due to friction.

Fume
Consists of solid particles formed by the condensation of vapors of solid materials.

Grease
A by-product of the cooking process of foods containing animal fat that escape as particles into the air and that can congeal on surfaces to provide a flammable substance.

Grease extractor
A proprietary device or system designed to remove grease particles from the air stream by centrifugal force and direct impingement, electronic precipitation, continuous water spray, or other approved means.

Grease filter
Filters designed to protect the exhaust ventilation system by collecting combustible grease contaminants from air exhausting from the hood cavity into the discharge duct/s.

HVAC
Heating, ventilation, air-conditioning system.

Heat sensor
A device, typically located near the duct collar of an exhaust hood, that measures the temperature of the exhaust air and automatically activates the exhaust fan whenever cooking operations occur.

Hood:
A device designated to contain grease, vapors, mists, particulate matter, fumes, smoke, steam, or heat before entering an exhaust duct.

IMC
International Mechanical Code

Inches water gauge (w.g.)
A measurement of resistance used to express velocity pressure, static pressure, or total pressure. One inch w.g. is equal to 0.04 pounds per square inch (p.s.i).

Indirect fired MUA unit
A make-up air unit that incorporates a heat exchanger which effectively separates the incoming air stream from the products of combustion and positive venting of combustion products may be accomplished with induced-draft fans.

Island hood
A type of canopy hood with 4 sides exposed.

Latent heat
The amount of heat released from a cooking appliance when steam makes a phase change to become a vapor, or when vapors condense.

Make-up air (MUA)
Air that is provided to replace air being exhausted (IMC).

Manometer
A device for measuring pressure. Usually it is a U-shaped tube partially filled with liquid, constructed so that the amount of displacement of the liquid indicates the pressure exerted on the instrument.

Minimal face capture velocity
The velocity of air in feet per minute required across the face of the hood to contain smoke, grease, vapors, steam, or heat in the regions outside the updrafts from cooking equipment.

MMC
Minnesota Mechanical Code. Chapters 2 to 15 of the 2006 edition of the International Mechanical Code (IMC) and Chapters 1 to 15 of the 2008 edition of NFPA 96 Standard for Ventilation Control and Fire Protection of Commercial Cooking Operations and Chapters 2 to 8 of the 2006 edition of the International Fuel Gas Code (IFGC) are incorporated by reference as part of the MMC with the amendments in Chapter 1346 of the MN State Building Code.

MUA
See Replacement Air

MSFC
Minnesota State Fire Code

Negative pressure
A condition when an interior pressure is less than the pressure of the area surrounding it. At 0.02-0.05 inches water gauge negative pressure, back-drafting and spillage of exhaust gases may begin to occur.

NFPA 96
Standard for Ventilation Control and Fire Protection of Commercial Cooking Operations, 2008 edition, promulgated by the National Fire Protection Association, Inc.

NRTL
Nationally recognized testing laboratory

NSFI
NSF International

Overhang
The area of a hood along an open face which projects horizontally beyond the kitchen equipment as measured from the internal perimeter of the hood.

Plenum
The internal exhaust collection chamber(s) of the hood which is (are) not directly exposed to the cooking equipment.

Positive pressure (also known as make-up air)
When the measured static pressure in an enclosed area is above the atmospheric pressure, it is expressed as positive.

Recirculating equipment

(i.e. ventless equipment)
Heating/cooking appliances that do not exhaust smoke, nuisance odors, or grease-laden vapor into a type I canopy exhaust hood, but instead exhaust into an integral air-cleaning device and out into the room air. Such cooking equipment must meet requirements of UL 710B.

Replacement air
See make-up air.

RH
Relative humidity

Sensible heat
The total heat gain radiating from an appliance, regardless of relative humidity, as represented on a thermometer.

SMACNA
Sheet Metal and Air Conditioning Contractors' National Association

Spillage
The escaping of contaminated air from a hood.

Static pressure
Represents the potential energy in a ventilation system that acts equally in all directions. It acts to collapse the walls on the suction side (inlet) of the fan and burst the ducts on the discharge side. It is a measurement of resistance expressed in inches of water or inches of water gauge.

Tempered make-up air
The supply of outside air in a controlled manner to an establishment and to each room provided with an exhaust system that is equal to replacement of 100% of the air exhausted or such quantity that the negative pressure created does not exceed 0.02 inches water gage. Makeup air shall be not less than 50°F measured at the flow of air from the supply diffuser into the space. This may include heating, ventilation, and air conditioning systems or direct and indirect fired make-up air units to temper and condition the air as required.

Throw
The distance measured in feet that an air stream under pressure travels from its discharge point to a point of zero velocity.

Transport velocity
The velocity range measured in feet per minute (fpm) required to move particulates in an air steam. The Uniform Mechanical Code requires a transport velocity in Type I (grease) ducts at least 500 fpm.

Type I exhaust system
The building codes distinguish between cooking processes that create smoke and grease and those that produce only heat, moisture, vapors and steam. Cooking that produces smoke and grease requires liquid-tight continuous external weld construction with a built-in fire suppression system (Type I). A Type I exhaust system is comprised of hoods, ducts, fans and a fire suppression system. The exception to the weld is a hood to duct connection in compliance with NFPA 96-7.5.2.2. Type I exhaust systems shall comply with all the equipment and performance requirements of NFPA 96 (newest edition).

Type I hood system
A kitchen exhaust hood, either canopy or non-canopy, designed for collecting and removing grease and smoke.

Type II hood system
A general kitchen hood for collecting and removing steam, vapor, heat, or odors.

UL
Underwriters Laboratory

ULC
Underwriters Laboratory of Canada

UL 710
Underwriters Laboratories Standard 710 which applies to the testing of Type I hoods under actual operating conditions. As a result, hoods are labeled as either U.L. listed or U.L. classified.

Updraft
The upward movement of air due to a change in density.

Velometer
(deflecting vane type)
A device for measuring air velocity.

Ventilator hood
(Backshelf hood or low sidewall hood)
A non-canopy hood designed to be as close as possible to the cooking surface, usually 18-24 inches above it.

Ventless dishwasher
A dish/ware washing machine, complying to ANSI-NSF International Standard #3, that utilizes cold water to condense steam/water vapor to minimal amounts entering the room and is not required to be placed beneath a Type II hood system.

GENERAL PRINCIPLES OF VENTILATION
FOR FOOD ESTABLISHMENTS

The heating, ventilation and air conditioning (HVAC) system in a commercial kitchen represents a major energy expense to a typical food establishment. The purpose of this section is to describe the major components of a properly designed commercial kitchen ventilation (CKV) system.

A commercial kitchen is a complicated environment for proper air distribution. There are many factors that can affect the capture performance of an exhaust system. Because kitchens vary widely in both their design and usage, it is not possible to present a single set of guidelines that will always guarantee complete contaminant capture in every situation.

The purpose of a CKV system is to safely capture and remove contaminants (such as grease, smoke, vapor, fumes, objectionable odors, etc.) in a method that prevents or reduces problems affecting the health, safety, and comfort of employees and customers. Improper ventilation can cause many problems such as excessive temperature or humidity levels, conditions which promote the growth of micro-organisms. (See “Ventilation Related Illnesses and Conditions” on page 29.

Ventilation requirements are driven by many different variables ranging from types of commercial kitchen equipment, menu, loading, capacities, floor area, ceiling height, air changes per hour, fresh air percentages, mechanical systems sizing, controls, distribution, installation, preventive maintenance, occupancy, etc. Design decisions and regulatory approval for different ventilation approaches must accommodate all variables relating to HVAC effectiveness and safety in order to minimize hazards to people and property.

General ventilation (also known as dilution ventilation) refers to the removal and supply of air from a general area, room, or building for the control of the ambient environment through the use of HVAC equipment. General ventilation may be used under certain circumstances for health hazard or comfort control, or in conjunction with the CKV system.

The theory of any ventilation system is quite simple: exhaust enough air to remove pollutants and replace it with sufficient clean make-up air (MUA) to prevent negative pressure in the building. The exhaust fan creates a low pressure through the duct to the hood above the kitchen equipment. The hood fills with hot, contaminated air created by cooking, heating, or dishwashing (warewashing) equipment. Negative pressure complicates the capture and containment of heat and contaminants, and results in back-drafting of gas or solid fuel appliances. Back-drafting may cause combustion by-products, such as carbon monoxide, to enter the space.

The capture of contaminants is dependent upon air flowing past the cooking surface at an adequate velocity to capture the particles in the air stream and draw contaminated air into the hood. The cooking or warewashing equipment can be thought of as a generator of contaminated air. The quantity of such air developed by each piece of kitchen equipment is mainly dependent upon the temperature and size of the cooking surface. The heated surfaces affect a density change in the surrounding air. This density change causes the air to rise, developing a thermal updraft. As the air rises from the heated surface, it is replaced by air in the immediate vicinity of the cooking equipment.

A local exhaust system should effectively contain airborne particulate contamination at its source with a minimum of airflow. An exhaust hood is utilized for this purpose. The more complete the hood enclosure, the more economical and effective the exhaust system will be to operate.

Beyond the actual ventilation needs from different food processing applications, there are different kinds of hoods, ventilators, extractors, filters and/or other methods for the capture and containment of heat, smoke, moisture and grease-laden vapors. Hoods are categorized by fire hazard. Type I hoods are used where grease deposition from cooking fatty foods or cooking with oil creates a fire hazard by leaving a film of grease on surfaces throughout the space. Type II hoods are used for collecting and removing steam, vapor, heat, or odors, but not grease or smoke. Generally speaking, a filter or grease extractor serves two purposes: to collect and contain grease, and to serve as a mechanical fire barrier to inhibit flame penetration. Type II hoods typically do not have filters as required for Type I hoods.

EPA testing method 202 references and other test methods that quantify volatile organic compounds (VOCs) and condensable particulates establish standards for acceptable levels of grease specific to a particular piece of equipment and menu item(s) in a laboratory setting. When a recirculating system (ventless hood) is listed to the UL 710B standard, a Type I hood is not needed; however, depending on the amount of heat generated, a Type II hood, or other supplemental mechanical ventilation, may be required. In addition other criteria must be met, such as adequate room size and general ventilation in order to safely allow installation without any exhaust (to the outside) or make-up air.

Design Criteria

Proper operation of a CKV system begins with good design. The most common problems in CKV are 1) too much or too little exhaust; 2) too much or too little make-up air (MUA); and 3) turbulence from entry of MUA into the kitchen resulting in poor capture and containment of the thermal plume above cooking equipment.

In designing kitchen ventilation, the following design concepts should be observed:

1. Hoods should be located where there will be a minimum of traffic and cross-drafts past the hood and face.

2. Island-type cooking arrangements ventilated by canopy hoods open on all four sides require considerably higher exhaust volumes than wall hoods.

3. To prevent grease from accumulating in the ductwork, filters or other grease extraction equipment must be incorporated into the hood. This reduces the danger of fire and makes the job of cleaning ducts and fans easier.

4. On unlisted hoods, grease filters should be sized according to the manufacturer's recommendations for velocity to maximize grease removal.

5. Grease filters should be mounted at an angle at least 45 degrees from horizontal with a grease gutter and grease collection container installed below the filters.

6. Exhaust ducts should be as straight and as short as possible with a minimum of elbows or other fittings. Horizontal exhaust ducts should slope toward the hood so that grease residues can drain back to the grease collection system.

7. Fans should be provided with hinged bases to make maintenance and cleaning easier and safer.

8. A fan should be selected which will exhaust the required volume of air against the calculated static pressure (resistance).

9. The MUA system should be designed to be capable of heating outside air to at least 50°F at the discharge point.

10. Diffusers should be distributed and sized to minimize cross drafts at the hood and to distribute air throughout the kitchen area for comfort during all seasons.

11. The kitchen area should be under a slightly negative pressure (less than 0.02 inches w.g.) in relation to the dining area. This will minimize grease and odors from escaping the kitchen area. The kitchen should be at equilibrium with outdoor conditions, which means the rest of the building is positively pressurized in comparison.

12. A heat sensor, or other approved means, should be utilized to automatically activate the exhaust fan whenever cooking operations occur. Other approved means could be a current sensing relay, an optic sensor, or an energy management system with appropriate controls.

Hoods

By using the thermal updraft concept that hot air rises, the purpose of the hood is to receive, capture, and hold the contaminated air until it can be exhausted. There are several types of hoods commonly used in CKV.

UL Standard 710 Listed Hood

The MN Mechanical Code requires exhaust hoods to meet certain design and construction standards, but it also permits exceptions for products which have been designed, manufactured, and tested to meet or exceed the performance standard. Underwriters Laboratory (UL) has established its Standard 710 for proprietary CKV systems. Those systems which have been listed by a nationally recognized testing laboratory as meeting UL Standard 710 are exempt from the specific requirements of the Mechanical Code. It is important to note that the engineering values for each listing are established in a controlled, laboratory setting, and as such, should be considered as minimum values. They should be used as a base line from which additional exhaust rates should be added to overcome turbulence and cross-drafts in a commercial kitchen.

The volume of air that must be exhausted with a Type I hood depends upon the temperature and area of the cooking surface beneath it. There are two approaches to determining the correct ventilation rates within the Mechanical Code. Many of today's hoods are pre-engineered products that are manufactured to nationally recognized standards. UL Standard 710 is referred to in the Mechanical Code as the exception to the prescriptive formula in the Code. Listed hoods must be installed in accordance with their listing, which includes such things as recommended exhaust volumes for different applications.

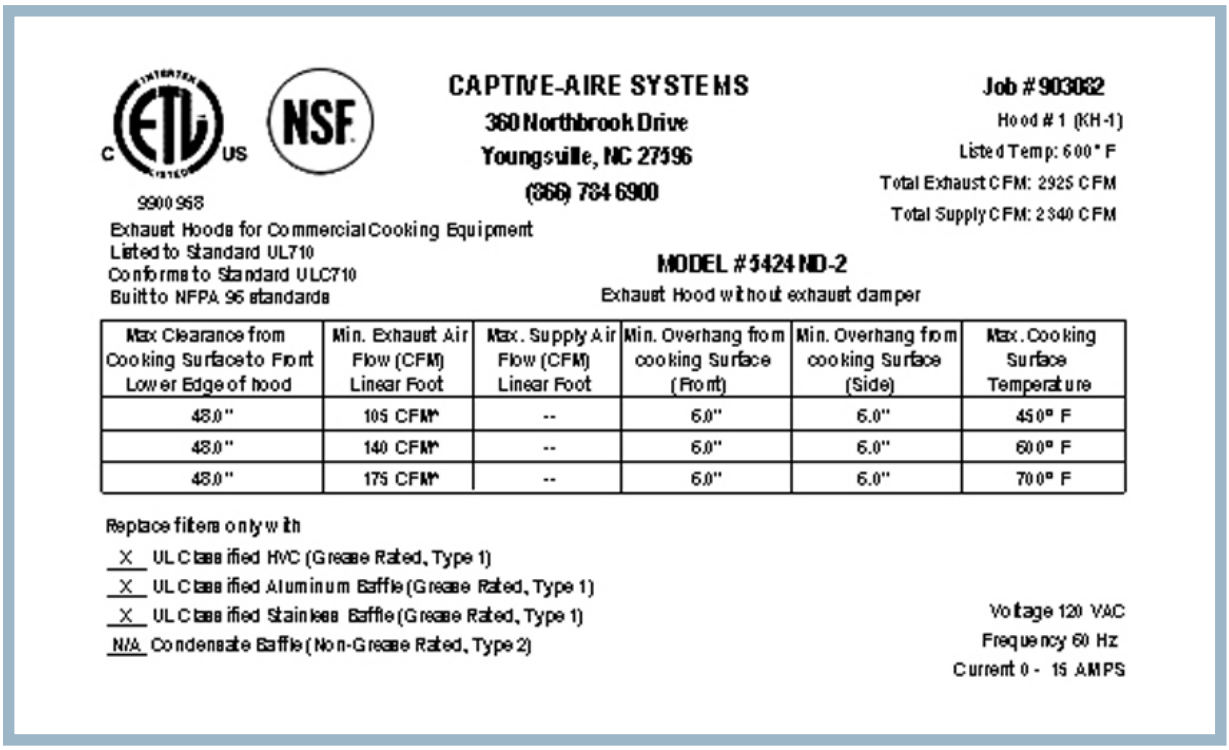

C ETL US NSF

9900968

CAPTIVE-AIRE SYSTEMS
360 Northbrook Drive
Youngsville, NC 27596
(866) 734 6900

Job # 903082
Hood # 1 (KH-1)
Listed Temp: 600° F
Total Exhaust CFM: 2925 CFM
Total Supply CFM: 2340 CFM

Exhaust Hoods for Commercial Cooking Equipment
Listed to Standard UL710
Conforms to Standard ULC710
Built to NFPA 96 standards

MODEL # 5424 ND-2
Exhaust Hood without exhaust damper

Max Clearance from Cooking Surface to Front Lower Edge of hood	Min. Exhaust Air Flow (CFM) Linear Foot	Max. Supply Air Flow (CFM) Linear Foot	Min. Overhang from cooking Surface (Front)	Min. Overhang from cooking Surface (Side)	Max. Cooking Surface Temperature
48.0"	105 CFM*	--	6.0"	6.0"	450° F
48.0"	140 CFM*	--	6.0"	6.0"	600° F
48.0"	175 CFM*	--	6.0"	6.0"	700° F

Replace filters only with
_X_ UL Classified HVC (Grease Rated, Type 1)
_X_ UL Classified Aluminum Baffle (Grease Rated, Type 1)
_X_ UL Classified Stainless Baffle (Grease Rated, Type 1)
_N/A_ Condensate Baffle (Non-Grease Rated, Type 2)

Voltage 120 VAC
Frequency 60 Hz
Current 0 - 15 AMPS

MMC Chapter 2, Definitions - See Commercial Kitchen Cooking Appliances

Most of the prescriptive criteria to follow in the section pertain to hoods that are not listed to UL Standard 710

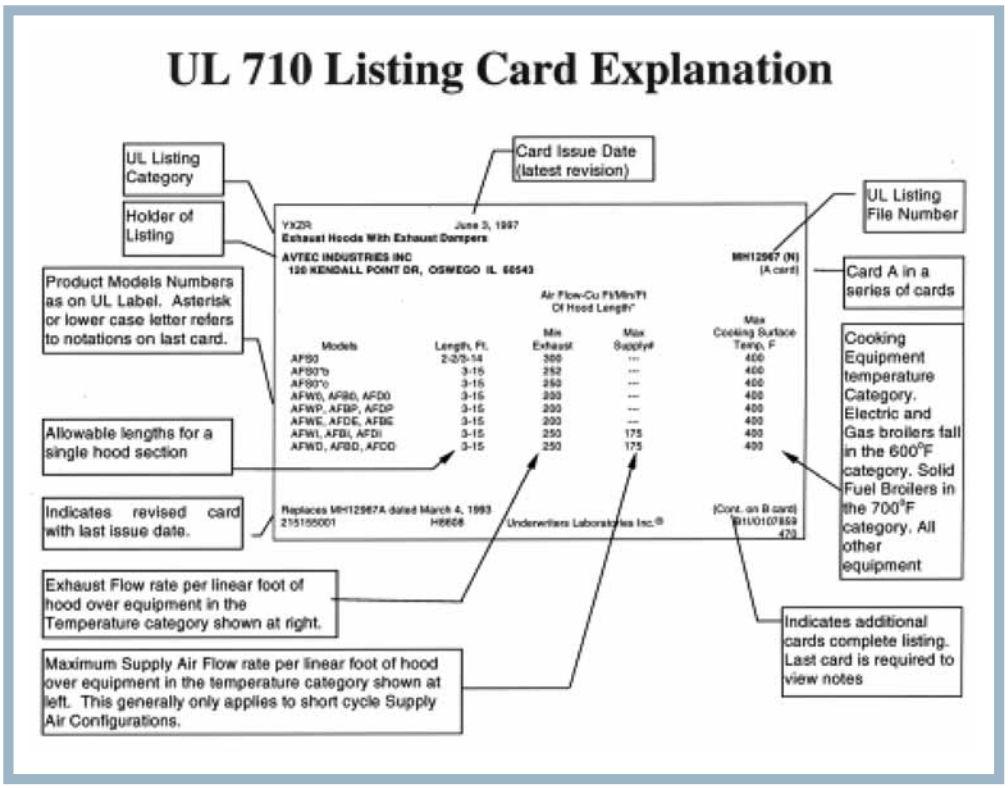

Canopy Type Hood

This is the most common type of CKV exhaust hood. It can be used over most of the familiar types of food service cooking equipment, such as ranges, fryers, griddles and ovens. Due to its relatively large size and volume, a canopy type hood is the most effective method for control of contaminants over cooking and dishwashing processes where sudden releases of hot vapors or gases are encountered. A canopy is not typically placed over rotary rack ovens, some smoker ovens (direct vent), hearth type ovens, and deck pizza and bakery ovens (eyebrow).

The wall-canopy hood abuts the back wall and the cooking equipment is placed under the hood with a minimum 6 inch overhang on all sides. This overhang can be disregarded on the ends of the hood if full side curtains are provided. If used, side curtains should extend from the bottom edge of the hood to the top edge of the cooking equipment and along the full width of the hood. The back wall on which the hood acts as a barrier so that no air is drawn along at this edge, thus reducing the air quantities. This arrangement dictates that there be a front-to-back airflow. Thus, all the air flowing into the hood must come from the front and sides and go up and back to the filters to be exhausted. (see drawing 1.)

The island canopy hood is suspended from the ceiling and has all sides exposed (see drawing 2), thus providing 4 different directions from which the replacement air will flow into the hood. This design is more susceptible to cross-drafts and spillage which necessitates increasing the size of the hood and air quantity to ensure that the proper capture velocity is maintained across the face of the cooking equipment. Side curtains can be installed, but the front and back must be considered in the airflow calculations.

Non-Canopy Type Hoods

The non-canopy type hood is used in applications where low ceiling height is a factor or for special types of hoods that are intended for light to medium duty cooking (see drawing 3). Unlike the canopy hood, which overhangs all open sides of the cooking appliances to capture the rising thermal plume, the non-canopy hood is set back or in front of the appliances and may have full or partial side panels. The non-canopy hood requires a higher inlet velocity to catch and contain the thermal plume, and it is usually placed closer to the cooking surface or opening than a canopy hood. A noncanopy hood is available as a Type I or Type II hood, depending on the specific application. Non-canopy hoods are generally classified in three categories: 1) backshelf (or proximity), 2) low sidewall (or plateshelf, pass-over), and 3) eyebrow (or cap) hoods.

Hoods listed to UL Standard 710 may be located within less than 24 inches between the lower edge of the grease filter and the cooking surface when listed as such. Backshelf and low sidewall hoods are also designed so that the front of the hood has a 12 inch maximum underhang (i.e. the distance that the cooking equipment extends beyond the face of the hood). At this distance the air flowing into the hood will maintain adequate velocity to capture grease-contaminated air and convey it to the filters. These hoods are not recommended for use with high heat or grease producing equipment because the small hood volume does not capture large surges of contaminated air. Also, filter temperatures above 200° F may permit grease accumulations to bake onto the filters, making them difficult to clean. Excessive temperatures will also cause grease accumulations on the filters to vaporize and pass through the filters. This vaporized grease will collect on duct walls, fan blades, or other system components, increasing cleaning and maintenance costs.

Drawing 1 — Wall Canopy Hood

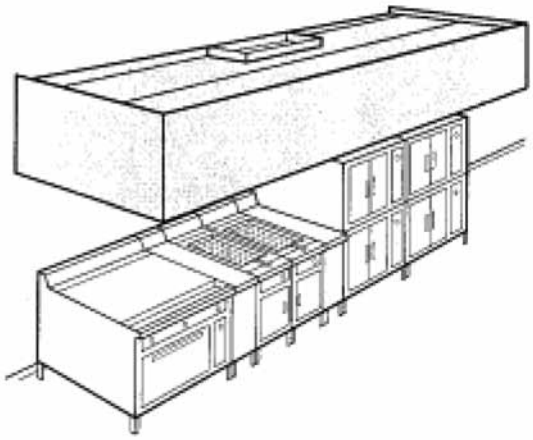

Drawing 2 — Island Canopy Hood

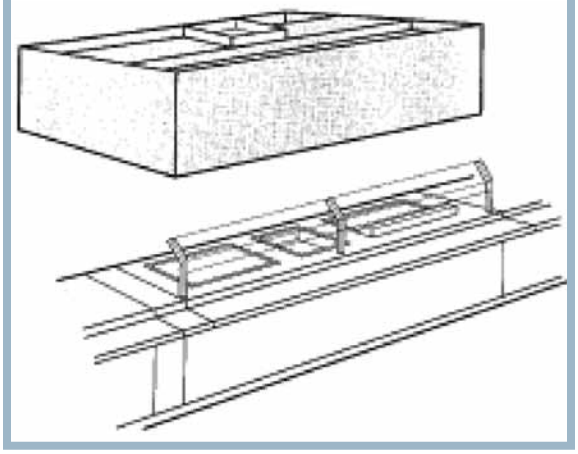

The main difference between the backshelf hood and the low sidewall hood is that the backshelf hood is designed to be mounted directly on the wall behind the cooking equipment, while the low sidewall hood (also known as a plateshelf or pass-over hood) is designed so that it can be free standing or mounted on the wall. This allows the area above the hood to be a “plate shelf” or “pass-over” between the cooking area and the serving area. The sides of the low sidewall hood extend from the top of the cooking surface to the bottom of the hood so that grease-laden vapors are captured effectively.

Drawing 3 — Non-Canopy Hood (low hood sidewall)

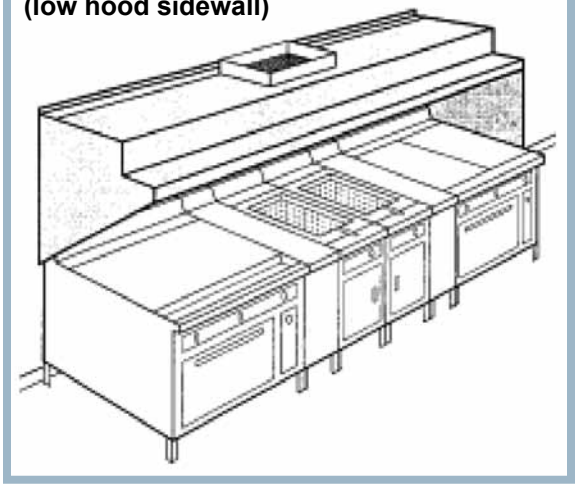

The eyebrow (cap, vent cowl) is a hood that is intended for use above a door or opening such as a pizza or bakery oven, or similar equipment that projects a thermal plume upward within a relatively narrow space along the entire width of the opening. These hoods may or may not contain a filter, depending on the specific application, and are usually mounted directly to the cooking appliance. They do not have to be completely contained under the hood. The maximum underhang of the equipment (i.e., the distance that the cooking equipment can extend beyond the face of the hood) is 12 inches. At this distance the air flowing into the hood will still maintain adequate velocity to capture grease-contaminated air and transport it to the filters.

Compensating Hood

Another concept is the compensating hood (see drawings 4 and 5). This hood is designed like any other canopy hood (wall or island) except there is an additional make-up plenum chamber built into the front leading edge (and at times the rear equipment level). Short circuit hoods (internal, untempered, make-up air introduced directly into hood) are prohibited in Minnesota.

There are different manufacturers of compensating hoods and the levels of compensation vary from manufacturer to manufacturer. Manufacturers of compensating hoods shall provide a label indicating minimum exhaust flow and maximum make-up air flow that provides capture and containment of the exhaust effluent.

Review and evaluation of the compensating hood is very critical to its proper performance. One method for determining the performance of a compensating hood is with the use of a smoke pencil. If any of the smoke escapes from under the hood, it is easily seen indicating the system is not operating properly.

Side Curtains

Side curtains are used to serve as physical barriers to reduce the amount of heat radiated into the kitchen and the amount of contaminated air spilled from under the hood. They improve the capture characteristics of a hood, reduce the air quantities exhausted, and increase the velocity of the incoming air at the front of the hood. This increased velocity helps to force the contaminated air back farther under the hood and reduce the amount of spillage. Side curtains are recommended in areas where strong cross-drafts from traffic or ventilation patterns exist which would disperse contaminated air into the kitchen.

Grease Filters and Grease Extractors

Grease filters are required to prevent large amounts of grease from collecting on the sides of the ductwork, fan blades, walls or rooftops. Efficient removal of grease from the exhaust airflow depends upon proper filter selection and placement.

For optimum grease removal, the velocity through the filters should be that which is specified by the filter manufacturer. This velocity is usually between 200 to 300 feet per minute (FPM) for the low velocity baffle type grease filters. This may require the installation of smaller filters, or sheet metal spacers, to achieve the optimum velocity through the filters. When spacers are necessary, they should be installed in areas where low updrafts are expected and distributed throughout the hood. Grease filters should always be placed at the ends of the hood to prevent spillage.

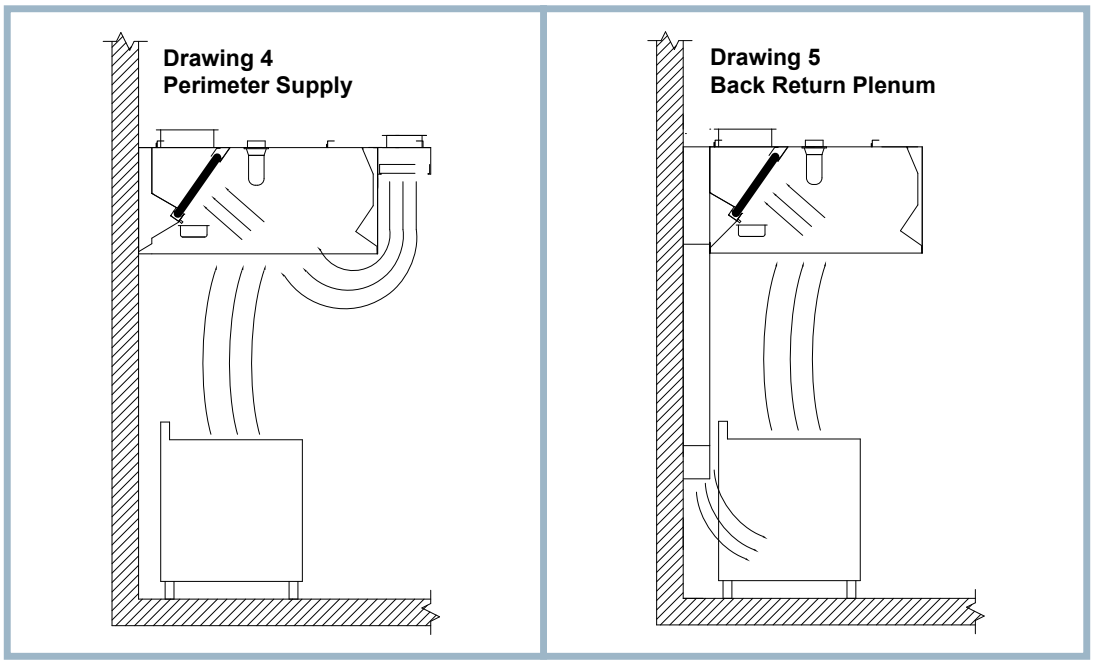

Ductwork

Ducts are the conduit through which the exhaust fan creates a negative pressure. They also serve as the transport mechanism to remove contaminants from the kitchen which are not removed by the grease filters.

Ducts should be designed and installed to be as short and as straight as possible to reduce static pressure (resistance). Cleanouts should be installed at each turn in the ductwork and at sufficient intervals to facilitate cleaning. Ducts should be constructed of steel and without screws, rivets, or other obstructions penetrating duct walls.

Type I ducts shall be continuously welded and liquid-tight to prevent grease leakage and to prevent water leakage during cleaning. The mechanical code requires a pressure test for ducts installed within a concealed enclosure of at least 1.0 inch water column positive pressure for a minimum of 20 minutes, unless an equivalent alternate test is specified by the building official. Listed duct assemblies shall be installed in accordance with their listing and typically are not required to be welded.

The cross-section area of a duct affects the velocity of air removed. As the cross-section area of a duct increases, the velocity of air within the duct decreases. A smaller duct increases the air velocity. NFPA 96 requires that the air velocity through any Type I duct may not be less than 500 FPM.

Canopy hoods should be equipped with one (1) duct for every 12 feet of hood length. Ducts should be located to provide equal draw across the face of the filters.

Capture Velocity

Proper capture and removal of contaminants is dependent upon air flowing past the cooking surface at an adequate velocity to capture the particles in the air stream and draw contaminated air into the hood. This is known as capture velocity.

The capture velocity must be great enough to collect the grease-laden air and pull it along in the air stream. If the velocity is too slow to overcome the heat currents and capture the grease, the grease-laden air will escape from the hood causing cleaning problems for the operator.

Exhaust Fans

The fan should be selected based upon its ability to overcome system resistance and move the appropriate amount of air desired. Since high pressure losses are associated with the systems, the fan selected should be of the centrifugal type. The high temperatures encountered in CKV applications require a fan with the motor located out of the airstream to prevent grease build-up or excessive temperatures which will cause motor burn out (UL762 Fan).

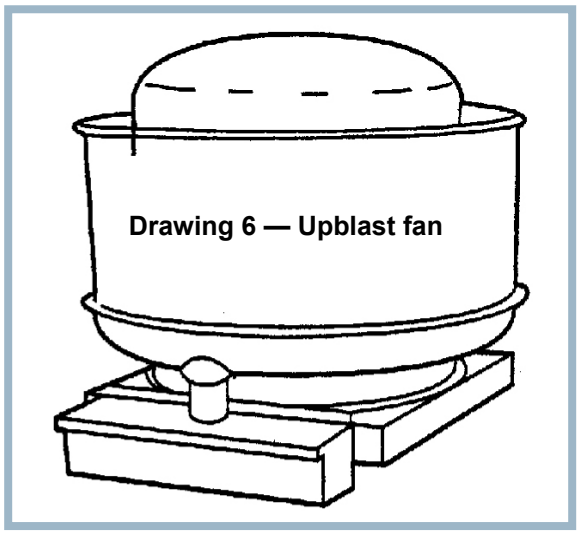

Drawing 6 — Upblast fan

Although various types of fans are available for CKV systems, the most common fan design is the upblast ventilator type (see drawing 6). This fan is designed to direct hot and contaminated air away from the rooftop to prevent roof damage.

Drains or other methods should be employed to catch and contain any grease which may collect and drip from the fan. NFPA 96 Section 8.1.2.4 requires the drain to be directed to a readily accessible and visible grease receptacle not exceeding 1 gallon.

Upblast fans shall be supplied with an access opening of a minimum of 3 inch by 5 inch or a circular diameter of 4 inch on the curvature of the outer fan housing to allow for cleaning and inspection of the fan blades according to NFPA 96 Section 8.1.5.3.1. In addition, upblast fans shall have an approved hinge mechanism with service hold-open retainers or restraining cables according to NFPA 96 Sections 8.1.1.1 and 8.1.5.3.2.

Make-up Air

Make-up air is a ventilation term used to describe the controlled supply of outside air to a building. An adequate supply of outside air is essential for proper ventilation. An exhaust system without sufficient make-up air will create a negative pressure situation in the building which will decrease the performance of the ventilation system (see 16 Signs That an Area is Starving For MUA). When the exhaust volume is small in relation to the size of the building, minimal negative pressure will be encountered. Older buildings may be less airtight, allowing large amounts of infiltration; therefore, a greater amount of air may be exhausted without encountering excessive negative pressure. Newer, more energy-efficient buildings may be relatively airtight and problems with negative air pressure may be encountered even when the exhaust volume is small.

When 0.02 inches w.g. or greater negative pressure exists, back-drafting of gas-fired equipment may occur. Building balance must be maintained for the following reasons:

1. To prevent a negative pressure condition which increases the static pressure the exhaust fan must overcome, resulting in reduced exhaust volume;

2. To eliminate high velocity cross-drafts through the doors and windows;

3. To ensure operation of natural draft stacks, i.e., combustion flues; and

4. To permit the safe opening and closing of building exterior doors.

The make-up air system shall be designed to provide replacement of approximately 100% of the total exhaust volume. Also, the mechanical code requires that a minimum of 80% of the makeup air shall be supplied into the space where the exhaust hood is located, and the makeup air shall not reduce the effectiveness of the exhaust system. Makeup air shall be provided by mechanical means and the exhaust and makeup air systems shall be electrically interlocked to insure that makeup air is provided whenever the exhaust system is in operation. It is possible for 100% of the air to be transferred from an adjacent space (such as a large dining area or cafeteria) if the transfer openings are sized large enough so that the velocity of the transfer air is minimal.

Once the decision is made to provide make-up air, the next step is to determine where and how to introduce the supply air into the kitchen. Two major problems encountered are:

1. High velocity drafts short-circuit the hood or disrupt the airflow pattern to the extent that capture effectiveness is reduced, and

2. High velocity drafts lower the effective temperature and cause worker discomfort.

The method of introducing make-up air into a kitchen is important for the effective operation of the exhaust ventilation system (see drawing 7). Ceiling diffusers located within 12 feet of an exhaust hood shall be directed away from the hood. An exception to this allows perimeter perforated supply plenums to be installed in accordance with the manufacturer's installation instructions. There are other ways to provide supply air to the hood effectively, but the key is to size the diffusers to ensure a low enough velocity to not reduce the effectiveness of the exhaust system.

When wall diffusers are used, they are usually introduced near the ceiling to keep the air flow near the ceiling until it mixes with the ambient air before circulating into the occupied zone. These diffusers usually have high face velocities to obtain sufficient air flow. However, care must be taken to ensure the resulting circulation pattern does not interfere with the capture characteristics of the exhaust hood or create worker discomfort.

Return air grills for recirculating systems should not be located in the area of food preparation or dishwashing because the air currents created can interfere with the capture characteristics of exhaust systems.

Drawing 7 — Kitchen Make-Up Air System

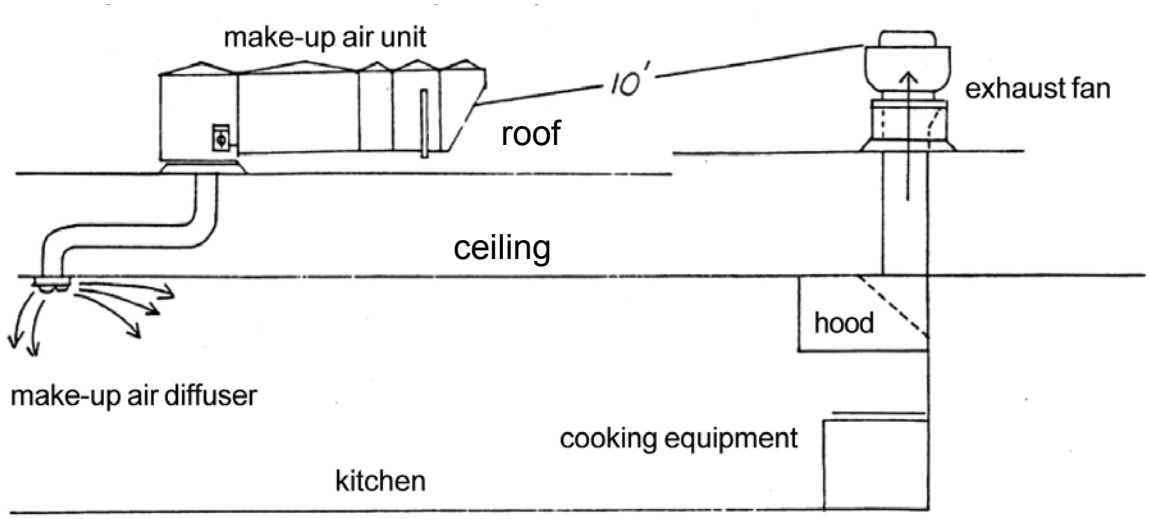

Sixteen Signs that an Area is Starving for Make-up Air

Doors Are Hard to Open

Are outward-opening doors hard to open? Do they slam shut? Are inward-opening doors hard to close? If so, you need make-up air.

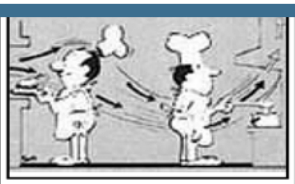

Draft Flow Toward Exhaust

Cold air flows in and rushes directly toward the exhaust, creating a serious draft problem. Make-up air eliminates drafts!

Smoke in the Kitchen

If your kitchen exhaust system isn't getting enough air to carry away smoke and food odors, it's starved! Feed it make-up air.

Frigid Walls and Windows

Starved exhaust systems suck icy outdoor air through cracks in walls and windows. The result: employees and customers suffer.

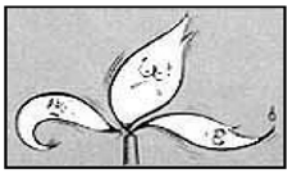

Fickle Flames and Pilots

Do downdrafts blow pilots out or cause heater flames to keep changing? They do if your exhaust system isn't getting enough air.

Leaky Walls and Roofs

Is rain "sucked" through cracks in walls and windows? Do mysterious leaks appear in roofs? This could be a negative pressure problem.

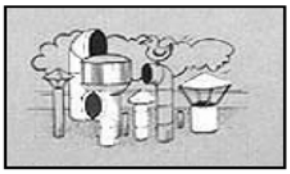

A Forest of Chimneys

A chimney can not work without air. A forest of chimneys is a sure sign they're fighting each other for a supply of make-up air.

Burned-out Exhaust Motors

Exhaust motors should last ten years. If your have to fight for make-up air, you'll have to replace them much more often.

Stale Locker Rooms

Are your locker rooms stale and odorous? Ventilation is essential, but also impossible without make-up air.

Employees Out Sick

Cold air infiltration makes work stations near doors and outer walls hard to heat. Absenteeism rises when temperature drops!

Fumes and Odors

Odors can't always be avoided, but a healthy exhaust system can get rid of them...providing it is fed an adequate supply of make-up air.

Flies Can't Stay Out

Flies collect at doorways near warmth and food odors. They're sucked inside by the "negative pressure" when doors are opened.

Poor Paint Jobs

Uniform paint coverage requires a steady flow of clean air. Backdrafts and fluctuating air flow cause varied coverage and waste.

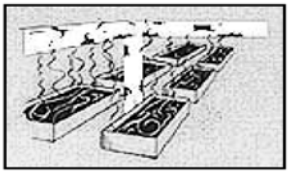

Corrosion of Steelwork

If structural steel or metal roofing is gradually being consumed by corrosive vapors, the exhaust isn't working properly.

Dust and Debris

Housekeeping is an endless problem! Dust and dirt are drawn in continuously through every opening when the exhaust isn't working properly.

Lazy Outlet Shutters

Outlet shutters stay half closed when they should be wide open, flutter with the slightest breeze or indoor air pressure change.

Reproduced with permission of Mars Air Products, Co.

Determining Exhaust Quantities

The amount of air which must be removed from the kitchen hood is dependent upon the following two quantities: 1) The amount of exhaust airflow which will remove all of the contaminated air being generated by the cooking or warewashing equipment and entering the hood, and 2) The amount of air required to establish a minimal capture velocity under the hood in areas outside the updrafts.

The generation of contaminated air from each piece of equipment is mainly a function of its size, temperature, and design.

Thus, it is important to understand the relationship between the quantity of airflow and the velocity in the basic ventilation formula:

$$Q = VA$$

Q = quantity (volumetric flow rate), measured in cubic feet per minute (CFM)
V = velocity, measured in feet per minute (FPM)
A = area (cross sectional) through which air flows, measured in square feet

This basic relationship describes airflow under all conditions. Accordingly, the equation can be transposed to solve for velocity or area when the other two factors are known, such as calculating both duct velocities and duct cross-sectional areas.

$$V = \frac{Q}{A} \quad \text{or} \quad A = \frac{Q}{V}$$

The minimum quantity of air exhausted through a commercial kitchen hood shall be determine in accordance with specific capacities require by the MN Mechanical Code. Listed hoods can be installed with a lower CFM exhaust quantities as long as they are installed in accordance to their UL710 listing.

Capacity of hoods

Commercial food service hoods shall exhaust a minimum net quantity of air as determined by Sections 507.13.1 through 507.13.4 of the MMC, which is based on the CFM per front linear feet of hood. Where any combination of heavy-duty, medium-duty and light-duty cooking appliances are utilized under a single hood, the exhaust rate required by these sections for the heaviest duty appliance covered by the hood shall be used for the entire hood. Hoods that are tested in accordance with UL 710, listed, labeled and installed in accordance with the manufacturer's installation instructions are not required to comply with these exhaust air quantities.

Airflow Resistance

Static pressure is the resistance to flow that must be overcome by air passing through a duct. There are two types of resistance: 1) friction losses, and 2) dynamic losses (turbulence). Friction losses are due to rubbing of air against the interior surfaces of the duct, while the dynamic losses are caused by air turbulence due to changes in direction and/or velocity.

It is necessary to overcome the resistance to flow or static pressure which builds up in the duct system to maintain the desired exhaust quantity passing through the duct. The velocity pressure represents the pressure necessary to move the air at a specific velocity within the ducts. The hood entry loss represents the energy necessary to overcome loss as the air enters the duct. Hood static pressure is equal to the velocity pressure in the duct plus the hood entry loss. Calculations of these pressures are necessary to accurately size a fan for a specific exhaust system.

Filter resistance is the amount of energy required to move air through the filter, and is also expressed as static pressure. The resistance for grease filters varies from manufacturer to manufacturer, and from type to type. Data for filter resistance calculations can be obtained from the manufacturer's specification sheets.

Methods of the Airflow Measurement

Airflow must be measured to ensure that exhaust and make-up air systems are functioning as designed. Most instruments used in testing ventilation systems measure velocity, even those that provide direct reading of total quantity. They are able to do this because they automatically convert the measured velocity to volume (Q=VA) utilizing the known open face area of the instrument. Therefore, velocity measurement is the most important aspect in testing a new or repaired ventilation system.

Testing and Balancing (Balance)

A final performance test of the completed CKV system is necessary to verify the velocity and quantity of air flow for both exhaust and make-up air systems. This test often takes many adjustments of the fan speeds to obtain the proper exhaust and make-up balance. Such testing should only be done by trained and qualified personnel.

The MMC requires mechanical ventilation systems to provide airflow rates within +/-10 percent of design capacities and fan speed to be adjusted to meet design airflow conditions. Also, systems balancing reports are required to verify system performance and they shall specify that the minimum amount of outdoor air required in amended Chapter 4 is provided to the ventilation system. Systems balancing reports shall be submitted to the building official upon request.

Performance Test for Capture and Containment

A performance test shall be conducted upon completion and before final approval of the installation of a ventilation system serving commercial cooking appliances. The test shall verify the rate of exhaust airflow, makeup airflow and proper operation as specified. The permit holder shall furnish the necessary test equipment and devices required to perform the tests. The permit holder shall verify capture and containment performance of the exhaust system. This field test shall be conducted with all appliances under the hood at operating temperatures, with all sources of outdoor air providing makeup air for the hood operating and with all sources of recirculated air providing conditioning for the space in which the hood is located operating. Capture and containment shall be verified visually by observing smoke or steam produced by actual or simulated cooking, such as with smoke candles, smoke puffers, etc.

TYPE I VS. TYPE II HOOD SYSTEMS

	TYPE I	TYPE II
Description:	A kitchen hood for collecting and removing grease and smoke.	A general kitchen hood for collecting and removing steam, vapor, heat, or odors.
Ducts and plenums:	Must be constructed of not less than 0.055 inch (16-gage) steel or stainless steel at least 0.044 inch (18-gage) in thickness, or in accordance to the terms of their listing.	Must be constructed of rigid metallic materials complying with HVAC air distribution duct requirements.
Joints & seams of ducts:	Must be made with a continuous liquid-tight weld made on the external surface of the duct system, or in accordance to their listing.	Must be constructed, joined and sealed to prevent dripping or leaking.
Grease duct penetration:	A grease duct which penetrates a rated ceiling, wall or floor must be enclosed in a two hour fire rated duct enclosure from the point of penetration to the outside.	No requirement.
Duct velocity:	Must not be less than 500 feet per minute.	No requirement.
Exhaust fan outlet:	Exhaust fan outlet must be positioned so that discharged air will not impinge on the roof. Vertical discharge exhaust fan must have its grease outlet a minimum of 10 inches above the roof.	See exhaust fan below.
Exhaust fan termination:	Exhaust outlet must be at least 10 feet horizontally from parts of the same or contiguous building, adjacent property line, or air-intake opening into any building (may be reduced to 5 feet if the discharge is directed away from such location) and must be located at least 10 feet above the adjoining grade level.	Same as Type I
Exhaust fan:	Any type of fan which is listed for use in grease exhaust systems and is installed in accordance with the terms of its listing and the manufacturer's installation instructions.	Per manufacturer's recommendation.
Hood materials:	Stainless steel not less than 20-gage.	Stainless steel not less than 0.024 inch (24-gage)
Clearance:	Where enclosure are not required, hoods, grease removal devices, exhaust fans, and ducts shall have a clearance of at least 457 mm (18 in.) to combustible material, 76 mm (3 in.) to limited-combustible material, and 0 mm (0 in.) to noncombustible material. Where a hood, duct, or grease removal device is listed for clearances less than those above, the listing requirements shall be permitted.	No requirement. No requirement.
Grease filters or extractors:	Grease filters must be UL 1046 classified. Mesh filters are prohibited	Mesh filters are prohibited.
Fire-extinguishing:	Must be in conformance with the Minnesota State Fire Code.	No requirement.

Note: The above is only a summary of criteria for type I and II hood systems. The reader is encouraged to review specific requirements in the Minnesota Mechanical Code and NFPA 96.

MINNESOTA STATE MECHANICAL CODE SUMMARY

The following are some key points regarding Commercial Kitchen Ventilation (CKV) requirements. They are NOT intended to be a comprehensive listing of all CKV requirements. CKV systems must be installed in accordance with the Minnesota State Building Code and the Minnesota Mechanical Code (MMC.) The MMC adopts the 2006 International Mechanical Code and the 2006 International Fuel Gas Code and NFPA Standard 96-2008 with amendments, and it became effective on October 26, 2009.

Note:

1. The MMC, Chapter 5, provides exceptions for UL Standard 710 listed hoods.

2. Some code sections from chapter 5 of the IMC are not adopted by the State of Minnesota. They are replaced with NFPA 96. Refer to the MMC for the appropriate adopted edition.

Ducts

- Grease ducts serving a Type I hood must be constructed of at least 16 gage steel or 18 gage stainless steel or a listed and rated duct assembly. All seams, joints, penetrations, and duct-to-hood connections shall have a liquid-tight continuous external weld. Ducts must be constructed and installed to prevent grease from pocketing. Ducts must slope at least ¼ inch per lineal foot toward the hood or toward an approved grease reservoir. Horizontal ducts longer than 75 feet must slope at least 1 inch per lineal foot toward the hood.
- Ducts and plenums serving a Type II hood shall be constructed of rigid metallic materials as specified in the SMACNA HVAC Duct Construction Standards.
- Ducts serving a Type II hood that are conveying moisture-laden or waste heat-laden air shall be constructed, joined, and sealed to prevent drips and leaking. Ducts subject to positive pressure shall maintain an air pressure test of 1.0 inch water column positive pressure for a minimum of 20 minutes, unless an equivalent alternate test is specified by the building official.
- Grease ducts must not have any openings other than those required for proper operation and maintenance. Any portion of a duct that is not accessible or changes direction must be provided with adequate cleanout openings.
- Grease ducts serving a Type I hood which penetrate a ceiling, wall or floor must be enclosed in a duct enclosure (or an approved alternate method which complies with MMC code section 304.1) as specified in NFPA 96 and the State Building Code.
- Grease ducts serving a Type I hood must be designed and installed to provide an air velocity within the duct of not less than 500 feet per minute (FPM).
- Listed grease ducts and ducts complying with NFPA 96 that are installed within a concealed enclosure shall maintain an air pressure test of 1.0 inches water column positive pressure for a minimum of 20 minutes, unless an equivalent alternate test is specified by the building official. One common alternate test is a light test that passes a minimum of 100 watt lamp through the entire section of duct to be tested. The lamp shall be open so as to emit light equally in all directions perpendicular to the duct walls. If the light is visible from the outside of the duct, then the joints, seams and penetrations are not liquid-tight.
- Rooftop grease duct exhaust outlets shall terminate at least 10 feet from adjacent buildings, property lines, and air intake openings into the building.
- Exhaust wall terminations are permitted, but must be arranged with or provided with properties as specified in NFPA 96 and the State Building Code.

- Access panels shall be provided at changes of direction of the duct and at 12 foot intervals when a 20 inch x 20 inch opening is not provided for personnel entry.
- Openings on horizontal grease duct systems shall be provided with safe access and a work platform when not easily accessible from a 10 ft. ladder as specified in NFPA 96.

Hoods

- Type I hoods shall be constructed of not less than 20 gage stainless steel or other approved material of equivalent strength and fire and corrosion resistance.
- Type II hoods shall be constructed of not less than 24 gage in thickness, stainless steel copper sheets weighing not less than 24 ounces per square foot, or of other approved material and gage.
- All joints, seams, and penetrations of a Type I hood enclosure shall have a liquid-tight continuous external weld to the hood's lower outermost perimeter. A listed hood shall be installed in accordance with the terms of the listing.
- All joints, seams and penetrations of a Type II hood shall be sealed on the interior of the hood and shall provide a smooth surface that is readily cleanable and watertight.
- Hoods must be designed to provide for thorough cleaning of the entire hood.
- Type I hoods must be equipped with listed grease filters, listed baffles or other grease removal devices. The distance between the grease removal device and the cooking surface shall comply with the separation distances specified in NFPA 96 Section 6.2.1.
- An overhang of at least 6 inches beyond the edge of the top horizontal surface of the appliance shall be provided on all open sides of canopy hoods. Exception: The hood shall be permitted to be flush with the outer edge of the cooking surface where the hood is closed to the appliance side by a noncombustible wall or panel, or the terms of the exhaust hood listed to UL 710.
- The vertical distance between the front lower lip of a canopy hood and the cooking surface shall not exceed 4 feet.
- Type I hood systems shall be designed and installed to automatically activate the exhaust fan whenever cooking operations occur. The activation of the exhaust fan shall occur through an interlock with the cooking appliances, by means of heat sensors or by means of other approved methods.

Filters

- Grease filters shall be listed and constructed of steel or listed equivalent material.
- Grease filters shall be arranged so that all exhaust air shall pass through the grease filter.
- Grease filters shall be installed at an angle not less than 45 degrees from the horizontal.
- Grease filters shall be easily accessible and removable for cleaning.
- Grease filters shall be equipped with a grease drip tray beneath their lower edges. Drip trays shall be pitched into an enclosed metal container having a capacity not exceeding 3.785L (1 gal.).
- If a grease filter efficiency is specified, it should be tested to ASTM Standard F2519-05 by a nationally recognized testing laboratory. The purpose of this ASTM standard is to determine the grease particle capture efficiency of filters used in commercial kitchens to capture grease effluent prior to entering the grease duct.

Make-up Air

- Each room equipped with an exhaust system must have air supplied to the room in an amount approximately equal to the exhaust air.
- Make-up air shall be provided by mechanical means.
- Exhaust and make-up air systems must be electrically interlocked.

- Make-up air must be tempered to a minimum temperature of 50 degrees F.
- Manufacturers of compensating hoods shall provide a label indicating minimum exhaust flow and maximum make-up airflow that provides capture and containment of the exhaust effluent.
- Short-circuit compensating hoods are prohibited.

Exhaust Fans

- Upblast fans shall be hinged, supplied with flexible weatherproof electrical cable and service hold-open retainers or restraining cables, and listed to UL Standard 762.
- Upblast fans shall be supplied with an access opening of a minimum of 3 inch by 5 inch or a circular diameter of 4 inch on the curvature of the outer fan housing to allow for cleaning and inspection of the fan blades.
- Upblast fans—where the fan attaches to the ductwork, the ductwork shall be a minimum of 18 inches away from any roof surface.
- Upblast fans shall discharge a minimum of 40 inches away from any roof surface.
- In-line fans shall be of the type with the motor located outside of the airstream and with belts and pulleys protected from the airstream by a greasetight housing.
- Exhaust fan wall terminations shall comply with NFPA 96 Section 7.8.3.
- Exhaust fans shall have a drain directed to a readily accessible and visible grease receptacle not to exceed 1 gallon.
- Exhaust fans shall be provided with safe access and a work surface for inspection and cleaning.

Testing

- A performance test shall be conducted upon completion and before final approval of the installation of a ventilation system serving commercial cooking appliances.
- The test shall verify the rate of exhaust airflow, makeup airflow and proper operation as specified. The permit holder shall furnish the necessary test equipment and devices required to perform the tests.
- The permit holder shall verify capture and containment performance of the exhaust system. This field test shall be conducted with all appliances under the hood at operating temperatures, with all sources of outdoor air providing makeup air for the hood operating and with all sources of recirculated air providing conditioning for the space in which the hood is located operating.
- Capture and containment shall be verified visually by observing smoke or steam produced by actual or simulated cooking, such as with smoke candles, smoke puffers, etc.
- Systems balancing reports shall verify system performance and shall specify that the minimum amount of outdoor air is provided to the ventilation system. Systems balancing reports shall be submitted to the building official upon request.
- HVAC systems shall comply with acceptance testing requirements in the Minnesota Commercial Energy Code.

Fire-Extinguishing Equipment

- Cooking equipment that produces grease-laden vapors and that might be a source of ignition of grease in the hood, grease removal device, or duct shall be protected by fire-extinguishing equipment according to NFPA 96 Chapter 10.

ANSI/NSF STANDARD NO. 2
REQUIREMENTS FOR EXHAUST HOODS

Interior Surfaces	Shall meet the food zone material requirements and shall comply with the splash zone design and construction requirements.	
	Food Zone Materials	Shall not impart toxic substances, odor, color or taste. Shall be smooth, easily cleanable, and corrosion resistant. Solder shall be non-toxic and corrosion resistant. Lead-based solder is not permitted. Copper and copper-nickel alloys are not acceptable.
	Splash zone design and construction	Fabricated to minimize retention of moisture, dust, or dirt. Designed to facilitate inspection, servicing, maintenance, and cleaning. Joints and seams shall be sealed and smooth. Joints shall be fabricated to eliminate horizontal edges. Exposed threads, projecting screws and studs are not acceptable.
Interior Reinforcing	Shall be smooth, easily cleanable, and not act as a dam or create a surface on which grease or condensate will collect and drip.	
Gutters	When provided, shall be smooth, easily cleanable, and fitted with a drain or clean-out opening.	
Exterior Surfaces	Shall be classified as non-food zones except joints and seams shall be sealed and exposed threads are not acceptable.	
	Non-food Zones **Note:** *(Comment: food zone requirements (hood interior) require stainless steel with a #3 or #4 finish on stainless steel. Coatings used on the hood exterior (for decorative purpose) must meet requirements for splash zone. Paint would not be acceptable)*	Materials shall be smooth and corrosion resistant or rendered corrosion resistant. Coatings, if used, shall be non-cracking and non-chipping. Fabricated to minimize retention of moisture, dust, or dirt. Designed to facilitate inspection, servicing, maintenance, and cleaning. Joints and seams shall be closed. Exposed threads, projecting screws, and studs are limited to no more than 2.5 threads or 6.5 mm (0.25in.).
Filters	Shall be readily removable and installed to prevent dripping into food. Metal mesh filters are not acceptable. Shall be designed to be pressure cleaned and self-draining.	
Plenum-type hoods Without filters	Baffles, turning vanes, and sliding dampers used to control air volume shall be readily accessible or readily removable and easily cleanable.	

COMMERCIAL KITCHEN VENTILATION PLAN REVIEW CHECKLIST

1. Equipment requiring exhaust ventilation shall be placed under the appropriate type of exhaust system. Refer to the flow chart and other criteria in these guidelines.

2. Commercial kitchen hood ventilation rates and installations shall comply with the terms of their listing or requirements of the Minnesota Mechanical Code, Rule 1346.

3. Equipment requiring exhaust ventilation shall be fully contained within the capture zone of the exhaust system. For a canopy exhaust hood, a horizontal distance of not less than 6 inches from the top horizontal surface of the cooking appliance shall be maintained on all open sides.

4. Performance of the exhaust system shall be verified by a capture and containment test. A performance test (balance report) shall be provided, at request, to authorities having jurisdiction for review.

5. Type I grease ducts shall be sized to provide a velocity of not less than 500 feet per minute (FPM).

6. The exhaust hood shall comply with ANSI/NSF Standard No. 2, and be listed by an approved third party testing laboratory.

7. Exhaust fans shall have a drain directed to a readily accessible and visible grease receptacle not to exceed one gallon.

8. Exhaust discharge location must be a minimum of 10 feet from the air intake openings, and adjacent buildings and property lines so that it does not create a nuisance condition.

9. Lighting shall provide a minimum of 540 lux (50 foot candles) at interior of hood as required by the Minnesota Food Code, M.R. 4626.1470 (C).

10. The floor, base cove, walls and ceiling materials are durable, easily cleanable, rated non-combustible and where required in accordance with NFPA 96 and the Minnesota State Fire Code, appropriate clearance is provided to combustibles.

11. Automatic fire suppression shall be provided for grease-producing cooking equipment in accordance with the latest adopted editions of the Minnesota State Fire Code and NFPA 96.

12. Make-up air shall be tempered and electrically interlocked with the exhaust system.

13. The total filter area for a Type I hood shall provide a velocity meeting the filter manufacturer's specifications.

14. Consult manufacturer's operation and maintenance manual for operation, maintenance and troubleshooting.

15. Consult manufacturer's installation manual for proposed equipment and ensure these documents are available to persons/technicians doing plan review, inspections and installations.

16. When using Minnesota Rule 1300.0110, provide documentation at plan submittal to avoid delays (Documentation from Building Official for alternative method to meet the intent of the code).

VENTILATION RELATED ILLNESSES AND CONDITIONS

SYMPTOMS AND CONDITIONS	AGENT	CAUSE
Headache, tracheobronchitis, nausea, weakness, dizziness, confusion, death	Carbon monoxide (CO)	Backdrafting of combustion gases from cooking equipment, furnaces, water heaters; frequently caused by lack of make-up air (MUA).
Headache, dizziness, restlessness	Carbon dioxide (CO_2)	Inadequate exhaust of combustion gases from cooking equipment, furnaces, water heaters; frequently caused by lack of MUA.
Irritation of eyes, skin and mucous membrane, delayed pulmonary edema, chronic respiratory disease	Acrolein (smoke)	Inadequate exhaust or lack of MUA during broiling or frying of meat containing animal fat.
Irritation of nose, pneumonitis	Sodium hydeozide (lye)	Inadequate exhaust or lack of MUA during cleaning.
Light headache, drowsiness, death	Liquid petroleum gas (LPG or bottled gas)	Inadequate exhaust, lack of MUA, or improper design of MUA causing interruption of gas combustion.
Mold growth	Excessive humidity, heat or mold spores	Inadequate exhaust or lack of filtered MUA source.
Condensation on walls or windows	Excessive humidity	Inadequate exhaust or lack of MUA.
Rapid spoilage of food	Excessive heat	Inadequate exhaust or lack of MUA.
Long refrigeration compressor run time	(1) Excessive heat (2) Radiant heat	(1) Inadequate exhaust or lack of MUA. (2) Location of refrigeration equipment near cooking equipment.

RECIRCULATING HOOD SYSTEMS
VENTLESS

New installations of recirculating hood systems shall comply with current criteria, use and maintenance, as outlined below.

Existing recirculating hood systems may continue to be used as long as normal routine maintenance is being accomplished and no citations have been issued by the regulatory authority. Existing systems are only approved in the original location and must not be relocated unless the hood system meets the criteria outlined in this document.

Background

There has been an increasing number of recirculating hood systems, also known as “ductless or ventless hoods,” being introduced into commercial food establishment kitchens.

The general concept of a recirculating hood system is to capture the effluent air generated from a cooking appliance, “clean it” using grease and charcoal filters or electrostatic precipitators (ESP), and deliver the filtered, processed air back into the conditioned space. Recirculating systems are specifically designed to remove grease, smoke, and odor. A few systems remove moisture-laden air.

Recirculating appliances transfer radiant and convective sensible heat, latent heat (e.g. moisture), along with the cooking effluent that passes through the emissions (filtration) control system, back into the space. These appliances require a well-designed heating, ventilation, and air conditioning (HVAC) system and must be installed in an area approved for such installation by the code official (building, health, or agriculture).

Recirculating appliances also require a prescribed (operations) schedule for cleaning, inspection, and testing of the components and operation.

There are different recirculating systems: integral (usually built into the appliance) and non-integral (free standing exhaust hood systems). There are hybrid systems that recirculate, but would allow for the direct-venting of flue gases from gas-fired cooking equipment.

The primary benefit of a recirculating system is to allow listed cooking equipment to be installed in a manner which does not require grease ducts that discharge to the outdoors. These systems are typically installed where it is impractical to exhaust to the outdoors. Examples include some indoor food carts, stadiums, arenas, and in operations where there is limited food preparation or where infrastructure limits access to the outdoors.

The standard components of most recirculating systems include:

- A collection hood
- A UL- listed grease filter
- A high-efficiency particulate absorbing (HEPA) filter and/or a ESP or water system
- An activated charcoal or other odor control device
- A fan
- A safety interlock system that disables the system if any of the components are missing or loaded with grease
- An approved fire suppression system

General requirements for recirculating systems are found in the following four references:

- Chapter 13 of NFPA Standard 96-2008 (or latest edition)
- UL Standard 710B, Standard for Recirculation Systems (latest edition)
- ANSI-NSF International Standard No. 2 for Food Equipment (latest edition) (on any separate recirculating hood assembly)
- ANSI-NSF International Standard No. 4 for Commercial Cooking, Rethermalization, and Powered Hot Food Holding and Transport Equipment (latest edition)

NFPA 96 addresses the design, fire suppression, maintenance, inspection, and testing of recirculating systems. As part of the maintenance for listed systems that have filters and/or ESPs, hoods and fans must be cleaned on a specific schedule, including testing of the total operation and interlocks. NFPA 96 also requires that all recirculating systems be listed with a nationally recognized testing laboratory (NRTL).

The recognized test for efficiency of a recirculating system is UL Standard 710B (formerly contained in Supplement SB of the Eighth Edition of UL 197). UL Standard 710B incorporates the EPA 202 test methodology for grease-laden effluent and compliance with components of NFPA 96. EPA test method 202 determines the amount of grease-laden effluent at the exhaust outlet of the recirculating hood system. These test results must not exceed an average of 5 mg/m^3 during an eight-hour test cooking period at a nominal exhaust rate of 500 cubic feet per minute (cfm). The test must be conducted by a NRTL accepted by regulatory authorities as conforming to UL Standard 710B.

Another section of UL 710B describes the test for units with internal grease vapor limiting systems. This test assumes that effluent emissions are below the EPA threshold of 5 mg/m^3. Internal grease vapor limiting systems have internal catalytic combustion systems which reduce grease emissions below the EPA threshold. These systems do not require on-board fire systems but are nonetheless intended for safe installation without a Type I or Type II hood.

Code References

The Minnesota Mechanical Code grants the building official the authority to authorize approval of a recirculating system, as follows:

Section 507.1 of the IMC states “Commercial kitchen exhaust hoods shall comply with the requirements of this section. Hoods shall be Type I or Type II and shall be designed to capture and confine cooking vapors and residues. Commercial kitchen exhaust hood systems shall operate during the cooking operation. Exception: Factory-built commercial cooking recirculating systems which are tested in accordance with UL 710B, listed, labeled and installed in accordance with Section 304.1 shall not be required to comply with Sections 507.4, 507.5, 507.7, 507.12, 507.13, 507.14 and 507.15.”

Section 304.1 General, states “Equipment and appliances shall be installed as required by the terms of their approval, in accordance with the conditions of the listing, the manufacturer’s installation instructions, and this code. Manufacturer’s installation instructions shall be available on the job site at the time of inspection.”

The Minnesota Food Code enables the code officials to authorize the installation and monitor the operation of recirculating systems, as follows:

Minnesota Rules Chapter 4626.1475 6-304.11 Mechanical, states “All rooms shall have sufficient tempered make-up air and exhaust ventilation to keep them free of excessive heat, steam, condensation, vapors, obnoxious or disagreeable odors, smoke, and fumes. All ventilation systems, furnaces, gas or oil fired room heaters, and water heaters shall be designed, installed, and operated according to Chapters 1305, 1346, and 7510. Plumbing systems shall comply with Chapter 4715.”

Criteria for Evaluation

Prior to installing a UL 710B listed recirculation system, the following technical data and testing documentation shall be submitted to the code official:

- Conformance with UL Standard 710B listing, including the UL edition date and name of the NRTL, including credentials and certifications (NSF International, ETL, UL, etc.).
- Actual test results of the average captured condensable particulate matter from the EPA Test Method 202 for Determination of Condensable Particulate Emissions from Stationary Sources, covering an eight-hour period and at a flow rate of 500 cfm, including the test media (foods) that were tested. The maximum allowable test emission rate is 100 mg/min.
- Compliance with NFPA Standard 96, including the NFPA edition date (Chapter 13 for Recirculating Systems).
- Compliance with the applicable ANSI-NSF International Standard No. 4 for Commercial Cooking, Rethermalization, and Powered Hot Food Holding and Transport Equipment (latest edition).
- The mechanical HVAC system must maintain the kitchen relative humidity (RH) at a level of less than 65%.
- When required by the code official, a professional engineering report documenting the sensible and latent heat gain into the space for cooking appliances with a heat input more than 3.7 KW (12,000 BTU/H) used to heat food. This report shall confirm that the building HVAC system has been engineered to overcome the heat gain introduced by the cooking appliance(s).
- Operations manual, including cleaning and maintenance schedule, for the recirculating system.
- If the HVAC design is incapable of accommodating the additional grease, heat, condensate, or odors to the

space, traditional ventilation may be required (i.e., Type I or Type II hood).

Use and Maintenance

The Operations and Maintenance Manual for the recirculating hood system must be located on site. Upon request, a copy shall be provided to the authority(s) having jurisdiction. The recirculating system must be installed and maintained in accordance to the instructions in the manufacturers' manual.

The following is a partial list of minimum required maintenance criteria, as outlined in NFPA 96, Chapter 13 for Recirculating Systems:

1. Inspection of the UL 300 listed fire suppression system by qualified service personnel every six months in accordance with the Minnesota Fire Code;

2. Filters cleaned or replaced in accordance with the manufacturer's cleaning instructions;

3. ESPs cleaned a minimum of once per week;

4. Hood plenum and fan cleaned a minimum of once every three months;

5. Inspection and testing of the total operation and all safety interlocks by qualified service personnel a minimum of once every six months or more frequently if required; and

6. Signed and dated log of maintenance.
   The instructions listed in the manufacturer's manual must be followed if it requires more frequent cleaning and inspection outlined in NFPA 96, Chapter 13.

The above comments and recommendations of the IARC Ventilation Committee do not constitute regulatory approval. The code official must approve the installation and use of recirculation hood systems.

Prior to any proposed installation of this equipment, it is imperative that the appropriate local fire and building officials are notified. Additionally, the appropriate health or agriculture regulatory authority must also be notified well in advance of all proposed installations so that an assessment of the facilities can be made, a plan review conducted, and any licenses can be issued.

VENTLESS DISHMACHINE
GUIDANCE

New installations of recirculating systems shall comply with current criteria, use and maintenance, as outlined below.

Existing and approved ventless systems may continue to be used as long as normal routine maintenance is being accomplished and no orders have been issued by the regulatory authority.

Background

The typical ventless dishmachine has an automatic vapor condensing system that uses cold water to condense the steam and water vapor from the dishmachine so that a minimal amount enters the room. The cold water eventually goes down the drain of the dishmachine. The vapor condensing system is a self-contained unit and is integral to the dishmachine.

Criteria for Evaluation

Prior to installing a ventless dishmachine, the following items will be evaluated by the code officials (building and either health or agriculture) to verify compliance with the intent of the code:

- Documentation that the ventless dishmachine complies with ANSI-NSF International Standard No. 3.
- A tamper-proof door interlock device shall be installed which will prevent the door from opening until the vent (dwell) cycle operation is complete.
- If the sump is located exterior to the dishmachine, it must be provided with a tight fitting cover.
- Dishmachine shall be installed by an authorized factory representative according to the manufacturer's installation instructions.
- Dishmachine shall have a drainboard and/or overhead racking with space for a minimum of five racks for a chemical sanitizing dishmachine, or three racks for high temperature dishmachine, for air-drying utensils.
- The factory authorized representative shall test and adjust the condensing hood for proper steam and water vapor capture and removal when the dishmachine door opens, to the satisfaction of the regulatory official(s) conducting the final inspection.
- Documentation provided by a licensed engineer registered in Minnesota indicating the minimum exhaust ventilation rate of a mechanical heating, ventilation and air-conditioning (HVAC) system required to maintain a maximum relative humidity (RH) of not more than 65% in the room where the dishwashing machine is installed using typical operating conditions, and climatic conditions, where the equipment is installed.

Documentation shall verify that the following space conditions are maintained:

- The space shall be designed to prevent condensation from developing on the water supply lines to the dishmachine.
- The minimum exhaust ventilation rate for the room in which the ventless dishmachine is located shall be equal to or greater than the exhaust rate required by the State of Minnesota Building Codes. An approximately equal amount of makeup air shall be supplied into the room in which the ventless dishmachine is located to replace the air exhausted, or freely communicating (unobstructed) space.
- An electrical interlock shall be provided that will prevent the operation of the ventless dishmachine when the ventilation system is not in operation.
- Make-up air shall not be less than 50°F measured at the flow of air from the supply diffuser into the space.

Code References

Minnesota Food Code grants the health officials the authority to authorize approval of a recirculating system, as follows:

4626.1475 6-304.11 Mechanical, states “All rooms shall have sufficient tempered make-up air and exhaust ventilation to keep them free of excessive heat, steam, condensation, vapors, obnoxious or disagreeable odors, smoke, and fumes. All ventilation systems, furnaces, gas or oil-fired room heaters, and water heaters shall be designed, installed, and operated according to the Minnesota Building Codes.”

Use and Maintenance

The Operations and Maintenance manual for the ventless dishmachine must be located on site. Upon request, a copy shall be provided to the authority(s) having jurisdiction (building and either health or agriculture). The system must be installed and maintained in accordance with the manufacturer’s instructions.

The above comments and recommendations of the IARC Ventilation Committee shall not be construed as regulatory approval. The local building official is responsible for approval of ventless systems.

Prior to any proposed installation of this equipment, it is imperative that the appropriate local fire and building officials are notified for their consideration. Additionally, the appropriate health or agriculture regulatory authority must also be notified well in advance of all proposed new installations so that an assessment of the facilities can be made, a plan review conducted, and any licenses can be issued.

SOLID FUEL EQUIPMENT
UNIQUE CONSIDERATIONS

Solid fuel, when used in commercial solid fuel cooking, is any bulk material such as hardwood, mesquite, charcoal or briquettes that are combusted to produce heat for cooking operations. NFPA 96 states that all solid fuel cooking equipment served by hood and duct systems shall be separate from all other exhaust systems.

All solid-fuel cooking equipment shall be installed as required by the terms of their approval, in accordance with the conditions of the listing, the manufacturer's installation instructions and the state building code.

Hearth ovens with heavy usage produce grease-laden vapors and effluent, and their ducts are subject to deposition of grease. An aggressive cleaning schedule may be needed. It is recommended than an inspection is made after the first 30 days of use to better determine the required cleaning schedule for safe operation. This cleaning requirement must be routine and available for review and inspection by the AHJ. Solid fuel cooking equipment shall be inspected, cleaned and maintained in accordance with the procedures outlined in the most recent adoption of NFPA 96.

Solid fuel cooking appliances that produce grease-laden vapors shall be protected by listed fire-extinguishing equipment. Fire-extinguishing equipment shall include both automatic fire-extinguishing systems as primary protection and portable fire-extinguishing systems as secondary protection.

Where acceptable to the AHJ, solid fuel cooking appliances constructed of solid masonry or reinforced portland or refractory cement concrete and vented in accordance with NFPA 211 shall not require fixed automatic fire-extinguishing equipment.

MINNESOTA STATE FIRE CODE
AN OVERVIEW

Background

The current edition of the Minnesota State Fire Code (MSFC) was adopted on July 11, 2007, and contains provisions for both new and existing buildings. Since it is adopted statewide, the MSFC applies in all areas of Minnesota and does not require local adoption for enforcement.

The MSFC sets the minimum level of safety, although local jurisdictions can adopt ordinances that increase (but not decrease) the level of safety by exceeding the code. In addition, the local fire official legally enforces the fire code. It is always necessary to contact the local fire marshal or fire chief with questions or before beginning any construction or installation.

Since it is a copyright document, the MSFC is not available for download on the internet. It is available for purchase from the Minnesota State Bookstore at (651) 297-3000 or (800) 657-3757. One of two options is available:

1. The 2006 International Fire Code (IFC) can be purchased and MN Rule 7511 can be downloaded at: www.dps.state.mn.us/fmarshal.html. The amendments in MN Rule 7511 must be used in conjunction with the 2006 IFC, or
2. The 2007 MN State Fire Code (MSFC) can be purchased. This is a stand alone book which already contains all amendments pre-inserted for ease of use. This book eliminates the need to download MN Rule 7511.

Inspections on fire safety issues may be conducted by a local fire or building official, or local fire chief. In some cases, State Fire Marshal Division inspectors conduct inspections of buildings (such as hotels and schools) or other fire safety concerns at the request of the local fire official. For questions about fire code requirements, first visit the State Fire Marshal's website at http://www.fire.state.mn.us, or contact the local fire marshal or fire chief, since this is the person with the legal authority to enforce the MSFC in that jurisdiction. If you are still unable to resolve an issue or get your question answered, contact the State Fire Marshal Division at www.dps.state.mn.us/fmarshal/firecode.html or (651) 201-7219.

Minnesota State Fire Code and Commercial Kitchen Ventilation

The installation of commercial kitchen ventilation and hoods, along with chimneys, flues and associated equipment, is covered in the International Mechanical Code. For questions relating to this topic, contact the State Building Codes and Standards Division at (651) 284-5068.

The Minnesota State Fire Code (MSFC) has only a minimum of requirements relating to commercial kitchen ventilation. Minnesota State Fire Code (MSFC) 609.2 requires a Type I hood whenever grease-laden vapors are produced. All installation requirements must follow the Minnesota State Mechanical Code.

Minnesota State Fire Code and Kitchen Cooking Equipment Suppression Systems

Although the MSFC refers the user to the Mechanical Code for guidance on ventilation and hoods, the Fire Code is the document that identifies when and how suppression systems for commercial cooking are to be provided. Because the exact wording of code language is important, the requirements for commercial cooking found in the MSFC have been copied here in its entirety.

SECTION 904 - ALTERNATIVE AUTOMATIC FIRE-EXTINGUISHING SYSTEMS

904.2.1 Commercial hood and duct systems.
Each required commercial kitchen exhaust hood and duct system required by Section 609 to have a Type I hood shall be protected with an approved automatic fire-extinguishing system installed in accordance with this code.

904.2.1.1 Protection of existing cooking equipment.
Approved automatic fire-extinguishing systems shall be provided for the protection of existing commercial-type cooking equipment that produces grease-laden vapors.

904.3 Installation.
Automatic fire-extinguishing systems shall be installed in accordance with this section.

904.3.1 Electrical wiring.
Electrical wiring shall be in accordance with the International Code Council Electrical Code Administrative Provisions.

904.3.2 Actuation.
Automatic fire-extinguishing systems shall be automatically actuated and provided with a manual means of actuation in accordance with Section 904.11.1.

904.3.3 System interlocking.
Automatic equipment interlocks with fuel shutoffs, ventilation controls, door closers, window shutters, conveyor openings, smoke and heat vents, and other features necessary for proper operation of the fire-extinguishing system shall be provided as required by the design and installation standard utilized for the hazard.

904.3.4 Alarms and warning signs.
Where alarms are required to indicate the operation of automatic fire-extinguishing systems, distinctive audible, visible alarms and warning signs shall be provided to warn of pending agent discharge. Where exposure to automatic-extinguishing agents poses a hazard to persons and a delay is required to ensure the evacuation of occupants before agent discharge, a separate warning signal shall be provided to alert occupants once agent discharge has begun. Audible signals shall be in accordance with Section 907.10.2.

904.3.5 Monitoring.
Where a building fire alarm system is installed, automatic fire-extinguishing systems shall be monitored by the building fire alarm system in accordance with NFPA 72.

904.11 Commercial cooking systems.
The automatic fire-extinguishing system for commercial cooking systems shall be of a type recognized for protection of commercial cooking equipment and exhaust systems of the type and arrangement protected. Pre-engineered automatic dry- and wet-chemical extinguishing systems shall be tested in accordance with UL 300 and listed and labeled for the intended application. Other types of automatic fire-extinguishing systems shall be listed and labeled for specific use as protection for commercial cooking operations. The system shall be installed in accordance with this code, its listing and the manufacturer's installation instructions. Automatic fire-extinguishing systems of the following types shall be installed in accordance with the referenced standard indicated, as follows:

1. Carbon dioxide extinguishing systems, NFPA 12.
2. Automatic sprinkler systems, NFPA 13.
3. Foam-water sprinkler system or foam-water spray systems, NFPA 16.
4. Dry-chemical extinguishing systems, NFPA 17.
5. Wet-chemical extinguishing systems, NFPA 17A.

Exception: Factory-built commercial cooking recirculating systems that are tested in accordance with UL 710B and listed, labeled and installed in accordance with Section 304.1 of the International Mechanical Code.

904.11.1 Manual system operation.
A manual actuation device shall be located at or near a means of egress from the cooking area a minimum of 10 feet (3048 mm) and a maximum of 20 feet (6096 mm) from the kitchen exhaust system. The manual actuation device shall be installed not more than 48 inches (1200 mm) nor less than 42 inches (1067 mm) above the floor and shall clearly identify the hazard protected. The manual actuation shall require a maximum force of 40 pounds (178 N) and a maximum movement of 14 inches (356 mm) to actuate the fire suppression system.

Exception: Automatic sprinkler systems shall not be required to be equipped with manual actuation means.

904.11.2 System interconnection.
The actuation of the fire extinguishing system shall automatically shut down the fuel or electrical power supply to the cooking equipment. The fuel and electrical supply reset shall be manual.

904.11.5 Portable fire extinguishers for commercial cooking equipment.

Portable fire extinguishers shall be provided within a 30-foot (9144 mm) travel distance of commercial-type cooking equipment. Cooking equipment involving vegetable or animal oils and fats shall be protected by a Class K rated portable extinguisher.

Note: Class K extinguishers shall not be used or installed in commercial kitchens that are not equipped with a wet chemical fire protection system. This would include existing kitchen hoods equipped with an automatic sprinkler system covered with the GEM EA-1 Protect-o-spray nozzle.

904.11.5.1 Portable fire extinguishers for solid fuel cooking appliances.

All solid fuel cooking appliances, whether or not under a hood, with fireboxes 5 cubic feet (0.14 m3) or less in volume shall have a minimum 2.5-gallon (9 L) or two 1.5-gallon (6 L) Class K wet-chemical portable fire extinguishers located in accordance with Section 904.11.5.

904.11.5.2 Class K portable fire extinguishers for deep fat fryers.

When hazard areas include deep fat fryers, listed Class K portable fire extinguishers shall be provided as follows:

1. For up to four fryers having a maximum cooking medium capacity of 80 pounds (36.3 kg) each: One Class K portable fire extinguisher of a minimum 1.5 gallon (6 L) capacity.

2. For every additional group of four fryers having a maximum cooking medium capacity of 80 pounds (36.3 kg) each: One additional Class K portable fire extinguisher of a minimum 1.5 gallon (6 L) capacity shall be provided.

3. For individual fryers exceeding 6 square feet (0.55 m2) in surface area: Class K portable fire extinguishers shall be installed in accordance with the extinguisher manufacturer's recommendations.

904.11.6.4 Extinguishing system service.

Automatic fire-extinguishing systems shall be serviced at least every 6 months and after activation of the system. Inspection shall be by qualified individuals, and a certificate of inspection shall be forwarded to the fire code official upon completion.

1006.2.7 Portable fire extinguishers.

A sodium bicarbonate or potassium bicarbonate drychemical-type portable fire extinguisher having a minimum rating of 40-B shall be installed within 30 feet (9144 mm) of commercial food heat-processing equipment, as measured along an unobstructed path of travel, in accordance with UFC Standard 10-1.

1006.2.8 Operations and maintenance.

The ventilation system in connection with hoods shall be operated at the required rate of air movement, and classified grease filters shall be in place when equipment under a kitchen grease hood is used. If grease extractors are installed, they shall be operated when the commercial-type cooking equipment is used.

Hoods, grease-removal devices, fans, ducts and other appurtenances shall be cleaned at intervals necessary to prevent the accumulation of grease. Cleanings shall be recorded, and records shall state the extent, time and date of cleaning. Such records shall be maintained on the premises. Extinguishing systems shall be serviced at least every six months or after activation of the system. Inspection shall be by qualified individuals.

Fusible links and automatic sprinkler heads shall be replaced at least annually, and other protection devices shall be serviced or replaced in accordance with the manufacturer's instructions. Exception: Frangible bulbs need not be replaced annually.

Temporary Cooking Operation, such as a mobile trailer or a booth at a fair

The requirements found in the MN State Fire Code for a hood suppression system for commercial cooking equipment are not directly applicable to temporary cooking operations such as a mini donut stand at a carnival or a mobile operation. In these cases, the MN State Fire Code has more flexible requirements that apply to all outdoor carnivals and fairs. Complete requirements can be found in Section 2404 (MSFC), but for purposes of commercial cooking, here are the major points:

- Concession stands utilized for cooking shall have a minimum of 10 feet of clearance on two sides and shall not be located within 10 feet of amusement rides or devices.

- K class fire extinguishers shall be provided where deep-fat fryers are used. There are additional requirements for fire extinguishers throughout the carnival midway, as required by the fire chief. All booths, even ones not using deep-fat fryers, should have immediate access to fire extinguishers.

- When propane (LP-gas) is used to fuel cooking equipment, the use shall be in accordance with MSFC Chapter 38 and the National Fuel Gas Code. There are too many requirements relating to propane to detail here, questions on the use of propane should be directed to the local fire marshal. Some of the more common problems include cylinders that are not secured, use of hoses instead of piping with high temperature materials (copper or steel), and use of LP-gas cylinders inside buildings (which is prohibited in all but a very few cases).

- When conducted inside a tent, canopy, or temporary membrane structure, cooking and heating equipment shall be vented to the outside. Where vents or flues are used, all portions of the temporary membrane structure, tent or canopy shall be no less than 18 inches from the flue or vent. Solid-fuel burning equipment shall be equipped with spark arrestors.

- Cooking and heating shall not be located within 10 feet of exits or combustible materials. Tents where cooking is performed shall be separated from temporary membrane structures, other tents and canopies by a minimum of 20 feet. Outdoor cooking that produces sparks or grease-laden vapors shall not be performed within 20 feet from a temporary membrane structure, tent or canopy. LP gas containers must be located outside tents. Flammable liquid-fueled equipment is not permitted in temporary membrane structures, tents or canopies.

- LP-gas cylinders larger than 10 oz shall not be used for any type of food preparation inside buildings. There may be a few exception in MSFC and the National Fuel Gas Code for larger cylinders in buildings not frequented by the public or during disasters or states of emergency, but in general, any LP-gas cylinder larger than 10 oz used for cooking inside a building should be investigated by the local fire official.

- Hoses should not be used to provide fuel from a cylinder located outside, to a cooking appliance located inside.

Tableside Cooking Inside a Restaurant

The 2007 Minnesota State Fire Code has requirements to limit the possibility of open flames from igniting other materials, especially in buildings frequented by the public. The important requirements are summarized as follows:

- If candles and other open flame decorative devices are used, there are requirements for the size of flame and enclosure of the burning fuel. For complete details, see the fact sheet on open flame devices available from the State Fire Marshal web site at www.dps.state.mn.us/fmarshal/firecode/firecode.html

- Portable fueled open flame devices must be enclosed in such a manner as to prevent the flame from contacting any combustible materials.

- Many portable cooking devices are fueled by LP-gas, usually in small nonrefillable (disposable) type fuel gas cylinder assemblies, with a maximum size of 10 oz and complying with UL Standard 147B. Usually the fuel is butane and the 10 oz or smaller cylinder is connected directly to a self-contained portable cooking appliance (single burner). At no time should cylinders larger than 10 oz be permitted to be used for cooking and no more than two containers may be connected to an appliance at one time. Containers shall not be manifolded. The fuel container must be an integral part of the listed commercial food service device and shall not be connected through the use of any hose. See NFPA 58 for more information.
- The cooking equipment must comply with ANSI-NSF Standards.
- The equipment must be cleaned and sanitized and properly stored after use.

Serving of Flaming Food

The serving of flaming foods or beverages must be done in a safe manner and not create high flames. The pouring, ladling or spooning liquids is restricted to a maximum height of 8 inches.

Location

Flaming foods or beverages must only be prepared in the immediate vicinity of the table being serviced, and not be transported or carried while burning.

Fire Protection

The person preparing the flaming foods or beverages must have a wet cloth towel immediately available for use in smothering the flames in the event of an emergency.

MINNESOTA STATE BUILDING CODE ADMINISTRATIVE AUTHORITY FOR COMMERCIAL KITCHEN VENTILATION

The following information provides guidance for installing equipment in an area that does not have a local building official.

Minnesota Statute 326B, 121 Subdivision 1, states as of August 1, 2008: The State Building Code is the standard that applies statewide for the construction, reconstruction, alternation, and repair of buildings and other structures of the type governed by the code.

Minnesota Statute 326B.121, Subdivision 2, states (as of January 1, 2008) a municipality (i.e. city, county or town, the University of Minnesota, or the state for public building and state licensed facilities) that has adopted the State Building Code must continue to administer and enforce the State Building Code within its jurisdiction.

Whenever work is being done within the State of Minnesota involving Commercial Kitchen Grease Ducts and Exhaust Equipment the work shall comply with the minimum requirements of the Minnesota State Building Code.

The Minnesota State Building Code (MSBC) includes Chapter 1346 (i.e. Minnesota Mechanical Code [MMC]). The Minnesota Mechanical Code has adopted by reference both the International Mechanical Code (IMC) and International Fuel Gas Code (IFGC) along with Minnesota amendments for both the IMC and IFGC. You need to reference the MSBC, MMC, IMC, NFPA and IFGC for all applicable requirements.

Included in the Minnesota amendments 1346.0506, a reference is made to the Minnesota Food Code, Chapter 4626, for commercial kitchen hoods licensed and inspected by the Department of Agriculture, Department of Health, or local authorities that conduct inspections of food establishments.

A map of all areas that enforce the State Building Code is available at www.dli.mn.gov/ccld/pdf/bc_bo_list.pdf. The map is within Helpful Information section (2007, page 13). In addition to the map, a list of active building officials for these areas can be found at www.dli.mn.gov/ccld.asp (codes and licensing), (services), (building officials list).

The plans and specifications shall be completed as required by MN Rule 1800.5200 and 1800.5900 which in summary requires any food establishment seating over 20 people or greater than 1,000 gross sq. ft. to “be prepared and certified by an architect or engineer”. One copy of the certified plans and specifications shall be submitted to the licensing authority for record purposes only. At a minimum the plans shall include all specifications relating to appliances, exhaust hoods, exhaust ducts, exhaust fans, make-up air, velocities, and all other informatin needed to review the system to be installed.

The plans and specifications are not reviewed by the licensing authority. The plans will only be used as documentation that the designs were completed by a licensed engineer or architect.

The licensed engineer or architect of record for the project will be responsible for final inspection and ensuring compliance with the applicable mechanical code requirements.

All balancing, capture and containment testing, and any concealed grease ducts or exhaust ducts that are required to be tested shall have all documentation submitted to the licensing authority. This will include submittal of balancing, capture and containment testing and proper testing of any concealed grease ducts or exhaust ducts conveying moisture.

ENERGY GUIDELINES FOR KITCHEN VENTILATION

Energy Guidelines for Kitchen Ventilation

Kitchen ventilation represents one of the largest uses of energy in a commercial food service facility. It accounts for up to 75 percent of a restaurant's HVAC load and for about 30 percent of a restaurant's total energy consumption. Yet many kitchen ventilation systems are poorly designed, creating an uncomfortable work environment and leading to the use of more energy than necessary.

Improved strategies for kitchen hood makeup air can significantly impact hood performance and should be a key factor in the design of kitchen ventilation systems. Unless carefully designed, makeup air introduced close to the hood's capture zone may create local air velocities and turbulence that result in periodic or sustained failures in thermal plume capture and containment; increasing makeup air supply to remedy this problem will increase turbulence.*

Recommendations to Reduce Kitchen Ventilation Energy Use

- Locate exhaust hoods on walls. Wall-mounted exhaust canopies require lower air velocities to do the same job. Lower air velocities mean smaller fan motors and less makeup air to heat or cool.
- Side (or end) panels permit a reduced exhaust rate in most cases, as they direct the replacement airflow to the front of the equipment. They are a relatively inexpensive way to improve capture and containment and reduce the total exhaust rate. An added benefit of side panels is mitigating the negative effect of cross drafts.
- Retrofit exhaust hoods with a demand-control or heat sensor to modulate the exhaust fans and make-up air fans according to the cooking conditions below. System must maintain proper capture, containment and balance. Duct work must be designed and installed to be structurally sound.
- Contact your local gas and electric utility about rebates available for implementing energy conservation strategies.

Web Resources

The California Energy Commission has published the following guides to help achieve optimum performance and energy efficiency in commercial kitchen ventilation systems. The guides include many Schlieren images showing the relative performance of various kitchen exhaust hood makeup air strategies:

- Design Guide: Improving Commercial Kitchen Ventilation System Performance
  www.energy.ca.gov/reports/2003-06-13_500-03-034F.PDF

- Guide to Optimizing Commercial Kitchen Ventilation
  www.energy.ca.gov/2005publications/CEC-500-2005-138/CEC-500-2005-138-FS.PDF

The Pacific Gas and Electric's Food Service Technology Center is an industry resource for commercial kitchen energy efficiency and appliance performance testing. Visit: www.fishnick.com.

* Information from the first two paragraphs was adapted from the two publications cited above.

VENTILATED CEILINGS

Ventilated ceilings have served many applications. The architectural draw of ceilings makes them great candidates for prestigious architectural projects, but ventilated ceilings have been used in many other applications such as display/exhibition cooking, culinary schools, correctional facilities, and cook-chill facilities. Logistics of hoists for cook/chill, and line of sight/safety concerns for correctional applications, have allowed ceilings to be valuable alternatives to standard canopies in these applications. The ceilings are ETL, listed and requires an approval by AHJ.

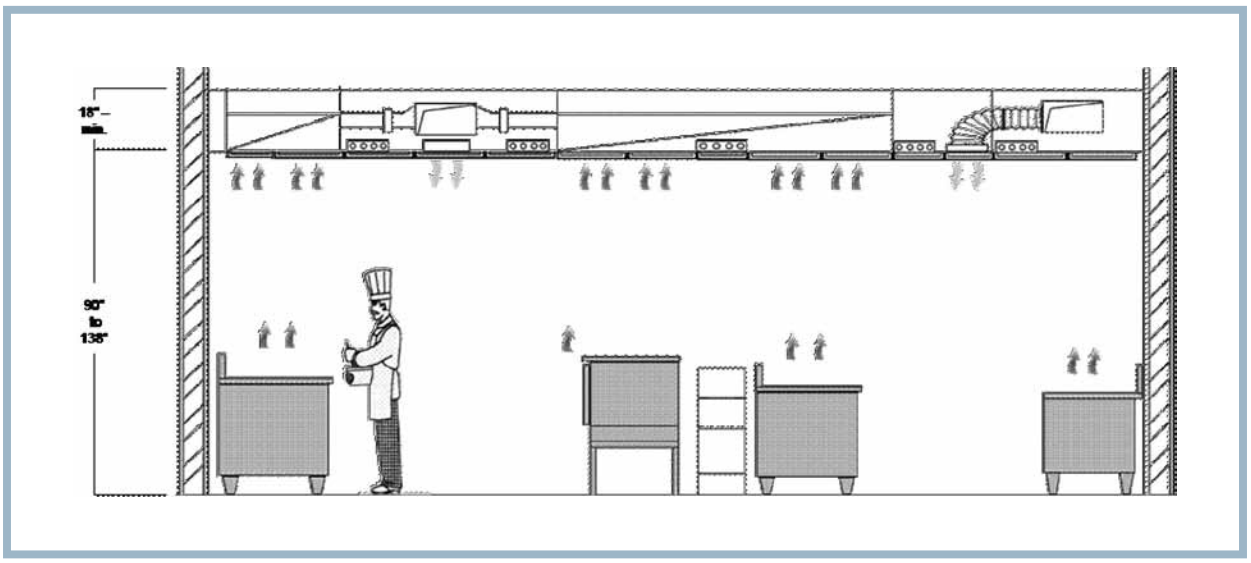

Components

Ventilated ceilings are constructed in the manner of standard “t bar” ceiling systems used commonly in North America. There are main and cross mullions that are hung from structure, and provide support for the four different types of “tiles”. Standard 2’ x 2’ tiles configured as extractor (grease filter), supply (make up air), lighting, or blank, are configured in a variety of ways to achieve an efficient design. The extractor tiles are similar to the grease filters in standard canopy hoods, and are placed over the cooking equipment surfaces, and above every four extractor tiles, is a fully welded exhaust plenum. Exhaust tiles are typically flanked by supply tiles to achieve a “balanced” distribution of air throughout the space. Lighting and blank tiles are configured in many ways to achieve the specific design intent of the project. Ventilated ceilings must be provided with a UL 300 fire suppression system.

VARIABLE EXHAUST SYSTEM

The variable exhaust fan control system is capable of saving energy during idle cooking periods. The control system is designed to automatically reduce exhaust and supply airflow quantities, while ensuring hood performance is maintained using high and low speeds that shall be adjusted by variable frequency drives. A temperature sensor and or optic sensor controls air flow set points and modulates the fans during cooking operation to maximize energy savings in accordance with UL 508A.

The control enclosure shall be rated and listed for installation inside of the exhaust hood utility cabinet or be wall mounted.

The temperature or optical sensor is fully modulating and adjusts exhaust air volume based on equipment temperature changes. The temperature sensor constantly monitors the exhaust air temperatures and works in conjunction with a panel mounted temperature controller to modulate the system based on the temperature, maximizing energy savings. For example, if production volume decreases, the system senses less cooking, based on less heat or smoke generation, and the exhaust air volume is reduced (not at full capacity).

FREQUENTLY ASKED QUESTIONS
AND ANSWERS

The answers for the FAQ's on the following pages are based upon Minnesota Mech.Code.

1. How do you promote partnering with trades and mechanical inspectors and code authorities on the all-important pre-opening inspection?

Since last minute delays due to lack of coordination can be a major inconvenience for all entities involved, it is of utmost importance to avoid potential problems well before the pre-opening inspection. Usually this can be accomplished by explaining the inspection procedures and frequency to the owner or owner's representative to ensure that necessary inspections are requested in an appropriate and timely manner. Having approved permits and proper documentation prior to inspection is extremely important. If questions develop, the trades people should contact the proper Authority Having Jurisdiction.

2. What is the difference between a Type I and a Type II hood?

A Type I hood is required for collecting and removing grease and smoke produced by cooking processes. Type I hoods must have approved grease filters or UL listed grease removal devices. A Type II hood is required where cooking or dishwashing appliances produce heat, steam, or products of combustion and do not produce grease laden vapors or smoke. Type II hoods do not require filters.

3. What is the difference between a Type I duct and a Type II duct?

According to NFPA 96 Non-Listed grease ducts for Type I hoods shall be constructed of carbon steel not less than No. 16 gage in thickness or stainless steel not less than No. 18 gage in thickness. However, UL listed grease ducts shall be installed in accordance with the terms of the listing and the manufacturer's instructions. The mechanical code states Type II ducts shall be constructed of rigid metallic materials and shall be constructed, joined and sealed to prevent drips and leaking. All seams, joints, penetrations and duct-to-hood connections shall have a liquid-tight continuous external weld.

4. What is the difference between a grease filter and a grease extractor?

A grease filter is a removable baffle filter listed to UL Standard 1046 (grease filters for exhaust ducts) that is designed to capture grease and drain it into a container. UL 1046 also requires a grease filter to limit the projection of flames into the grease duct. Grease filters are designed to easily insert into a channel or bracket in the rear of the hood, which allows for easy removal and cleaning. A removable grease extractor is usually designed as a cartridge that is an integral component of a listed exhaust hood. A stationary grease extractor, also known as a water-wash hood, contains an integral slot or baffle that runs the entire length of the hood. The water wash system can be either a continuous cold water mist or a periodic hot, detergent-injected water spray that is typically activated at the end of the day. The MN Mechanical Code does not specifically address grease extractors.

5. Are ventilation requirements different for gas equipment vs. electric?

No. The mechanical code dictates the CFM requirements based on appliance cooking temperature. It is based on the hazard such as Extra-Heavy Duty Cooking Appliances, Heavy Duty Cooking Appliances, Medium Duty Cooking Appliances and Light Duty Cooking Appliances.

6. What are the venting requirements for a wood hearth oven?

It is extremely important that the manufacturer's installation instructions are followed. NFPA 96 does not allow solid fuel equipment to share a vent with a gas-fired appliance. A number of different types of duct systems may be used to vent a wood hearth oven. Solid fuel cooking equipment may be vented with a factory-built grease duct system or a Type I duct system (which would require a rated fan at the outlet). Factory-built grease duct systems must be installed according to their listing, following the installation instructions and must also comply with the most recent adoption of NFPA 96. Solid fuel cooking appliances that produce grease-laden vapors shall be protected by listed fire-extinguishing equipment. Fire-extinguishing equipment shall include both automatic fire-extinguishing systems and secondary protection. Where acceptable to the AHJ, solid fuel cooking appliances constructed of solid masonry or reinforced portland or refractory cement concrete and vented in accordance with NFPA 211 shall not require fixed automatic fire-extinguishing equipment.

7. What are the distance requirements from the cooking surface to the bottom edge of the hood?

The distance from the cooking surface to the bottom edge of the hood must not exceed 4 feet, but not less than 18 inches from the cooking surface to the hood filters. UL listed hoods shall be installed in accordance to their listing and installation instructions.

8. How do I calculate the exhaust rate of an existing duct system?

The best method would be to get the installing contractor and the hood and fan manufacturer involved to determine what the original design was. There are devices available to measure velocity, however a person must have proper training and equipment. Professional air balancing companies may be hired to take readings with their instruments, if necessary.

9. What are the general requirements for make-up air (MUA)?

According to the MN Mechanical Code make-up air must be supplied during the operation of commercial kitchen exhaust systems. The amount of make-up air shall be approximately equal to the exhaust air. A minimum of 80% shall be supplied to the space where the exhaust hood is located. In addition, an electrical interlock must connect the exhaust and make-up air systems. The make-up air must be tempered and cannot be measured less than 50° F from the discharge diffuser in the room. Lastly, the make-up air shall not reduce the effectiveness of the exhaust system.

10. What is a compensating hood?

A compensating hood is one that includes a tempered make-up air plenum within, behind or around its perimeter or through its face to accommodate a portion of the total make-up air requirement. There are several types of compensating hoods such as perimeter supply, back return and front face discharge. Typically, the remaining air then comes through ceiling diffusers, registers, or through transfer air. Short circuit compensating hoods are prohibited.

11. When can transfer air be used in lieu of dedicated make-up air (MUA)?

There are two important differences between fresh air and transfer air. Fresh air comes from outside, so when it is introduced by powered means, it pressurizes the indoor space. Transfer air comes from within the same building and can sometimes be used for a portion of the total replacement air room pressure. According to the Mechanical Code a minimum of 80% of MUA shall be supplied into the space meaning only 20% can come as transfer air.

12. What does "listed hood" mean and when is it required?

A listed hood is a particular model of hood that a manufacturer has designed and developed to withstand the UL Standard 710 or 710B performance test. This worst case test takes the materials as specified by the manufacturer, and their specific performance techniques, and tests the assembly with very high temperature grease fires to assure the system does its job of capturing and containing. When a particular design of hood has passed the UL 710 or 710B test, it is said to be "listed", and is exempt from many of the requirements of the Mechanical Code. A listed hood is not required; however, the primary advantage to an owner for utilizing a listed hood over an unlisted hood is that the required exhaust air volumes may be less. This is often a significant cost savings over the life of the overall system. Listed hoods are the exceptions referred to in the Mechanical Code as it relates to calculating exhaust air volumes and resulting MUA needs. Look for the data plates affixed to UL 710/710B hoods with information about the listed cooking equipment temperature rating for this specific hood.

13. What is an approved grease filter?

One type of grease filter is a baffle grease filter, listed labeled and installed in accordance with manufacturer's specifications. Listed grease filters shall be tested in accordance with UL 1046, Standard for Grease Filters for Exhaust Ducts. It should also be approved and stamped as such to the ANSI NSF Standard 2 to meet the Minnesota Food Code requirements. Mesh filters cannot be used in a Type I or Type II hood. There are both aluminum and stainless steel baffle filters available with UL classification for use over cooking equipment. Though the Code does not prescribe the use of one over the other, aluminum filters are dangerous in high temperature application, such as over a solid fuel broiler, or above an under-fired gas broiler enclosed on three sides, because of their lower melting point in comparison to stainless steel. Grease filters that require a specific orientation to drain grease shall be clearly so designated, or the hood shall be constructed so that filters cannot be installed in the wrong orientation. Some listed hoods may have grease removal devices that appear to be removable, and have an integral slot running the length of the cooking equipment. These are part of the listing and are approved in the lieu of baffle filters. Individual filters are classified based upon their average face velocity. It is important that the exhaust rate enables the filters to be within their classified range of air velocity (FPM). If grease filters are installed, filters must be cleaned and maintained in accordance to the manufacturer's specifications.

14. How much lighting is required at the cooking surface?

The lighting intensity must be at least 50 foot candles at the surface where employees are working with food. An adequate number of lights must be located inside to provide the required illumination at the cooking surface.

15. What cleaning frequency is required for Type I hoods and ducts?

According to NFPA 96 systems serving solid fuel cooking operations should be cleaned monthly. Systems serving high volume cooking operations such as 24-hour cooking, charbroiling or wok cooking should be cleaned quarterly. Systems serving moderate-volume cooking operations should be cleaned semi-annually. Lastly, systems serving low-volume cooking operations, such as churches, day camps, seasonal business or senior centers should be cleaned annually. A person can also refer to the manufacturer's instructions, local municipalities, and insurance companies for minimum cleaning frequencies.

16. What are the fire suppression requirements for a Type I Hood?

The MSFC requires approved automatic fire-extinguishing systems be provided for the protection of commercial type cooking equipment. Exception: The requirement for protection does not include steam kettles and steam tables or equipment that does not create grease-laden vapors. If a convection oven, for example, produces grease-laden vapors, then it would require a fire-extinguishing system. Types of systems available include: wet chemicals, wet chemicals and water assisted, and building sprinkler systems. New installations must be in compliance with UL300.

17. What considerations should be taken into account when discharging make-up air into the kitchen?

The distribution of MUA into the kitchen must meet the following principles:

a. Distribute air into the kitchen area without disturbance to the hot and cold food holding equipment.
b. Distribute air into the kitchen without air turbulence or contamination to food products or discomfort to personnel, and
c. Distribute air into the kitchen in a manner that does not disturb the function of the capture air velocity at the hood perimeter.

18. Does all gas-fired cooking equipment need to be located under a hood?

Generally yes, a hood is typically required above gas appliances, but it may be possible to direct vent the products of combustion on some gas appliances such as an oven in a one story building if sufficient provision is made to the HVAC system to handle the heat generated by the appliance within the occupied space where the appliance is located.

19. Are there any changes in the code requirement when a NSF fabricator is called in to make some modification to the existing hood, e.g. Mechanical Code, Food Code, and UL Standard 710?

The filter rack and plenum of the hood cannot be modified without voiding the UL 710 listing. Changes to the duct collar must be done in accordance to NFPA 96. Prior to such work, the fabricator should contact the listing holder (manufacturer) and describe the work to be performed to determine what impact, if any, it will have on the listing. In addition, if an NSF fabricator makes any modifications to the hood, the hood should be appropriately evaluated and relabeled by a listing agency.

20. When do older ventilation systems need to be updated?

The Minnesota Food Code, Section 4626.0690 requires the ventilation system to have sufficient capacity to prevent the accumulation of grease or condensation on the walls and ceilings. If a special fire hazard exists, a fire official can order changes in accordance with the State Fire Code. The Mechanical Code allows existing ventilation systems to remain if the use is in accordance with the original design and location, and no hazard to life, health, or property had been created. A change in equipment and or use would require approval from the code official prior to making the change.

21. What are the specific requirements for the wall surface beneath the hood?

Walls below the hood should be smooth and easily cleanable. The walls shall be protected in accordance to NFPA 96 Chapter 4.2.4.3 which states protection shall be provided on the wall from the bottom of the hood to the floor, or to the top of the noncombustible material extending to the floor, to the same level as required in section 4.2.1., which describes clearances for exhaust hoods. Chapter 4.2.1 states where enclosures are not required, hoods, grease removal devices, exhaust fans and ducts shall have a clearance of at least 18 inches to combustible material, 3 inches to limited-combustible material and 0 inches to noncombustible material. Section 4.2.2 then states where a hood, duct or grease removal device is listed for clearances less than those required in 4.2.1 the listing requirements shall be permitted.

22. How does the regulatory authority quantify odors for determining inadequate ventilation and then convert this into objective data, so that he/she can write an order to repair the ventilation system?

There is no known method to scientifically measure odor. Each human being measures odor differently. If inadequate ventilation is suspected based on subjective criteria, a performance test (or testing and balancing report) may be requested to verify the required rate of air movement as specified in the MN Mechanical Code.

23. When is an exhaust system required in a commercial kitchen?

A Type I hood shall be installed at or above all commercial food heat-processing appliances that produce grease vapors or smoke. A Type I or Type II hood shall be installed at or above all commercial food heat-processing appliances that produce fumes, steam, odor or heat.

24. Can I use a re-circulating hood?

It is the responsibility of the local Building Official to approve or not approve installations of re-circulating systems. If allowed they must meet UL 710B, meet the maintenance schedule specified by the manufacturer and must be installed in areas with adequate ventilation. These systems can add both latent and sensible loads to the space.

FLOW CHART
HOW TO USE

When using a flow chart, only ONE question can be asked at a time. Furthermore, the “flow” of the chart must be followed. Always begin at the arrow for the starting point, question 1, which asks if smoke or grease–laden vapors are produced. For example, If you answer 1 (the first question) with a YES (it does produce smoke or grease-laden vapors), then you never get around to asking the questions relating to the process producing steam, nuisance odors or the total heat input levels asked by 3 unless the answer to 1 is No. Thus, if you answer YES to the first question, NO to the third question, and the cooking or heating equipment does not comply to UL710B you get a Type I hood. You cannot then answer subsequent questions, as they do not follow logic line (or flow) of the chart. However, if, in the inspector’s opinion, the amount of grease-laden vapors produced is insignificant or not visible, then they can use the “other criteria” to justify installing the equipment either with a Type II hood, or no hood at all. The flow chart is a great guideline, but it is worthless if the flow chart discipline is not applied.

Type I

1. Does cooking/heating process emit smoke or grease-laden vapors?

This is the most important of all of the questions, and requires the most diligence to answer. Grease deposition is a fire hazard because grease may spontaneously combust at about 680° F. Objective documentation may exist to assist. EPA 202 documents a concentration of particulates given a specific ventilation rate for UL 710B listed re-circulating hood systems using UL 300 fire suppression systems. Concentrations of less than 5 mg/m^3 at specific exhaust rates are considered to be negligible, and not a fire hazard. Future test methods will provide documentation relating to total volume of grease-laden effluent irrespective of exhaust rates. Subjective evaluation criteria are also valid. If there is no oil medium, and the product does not include animal protein items, then there will not be grease-laden effluent. There may be “excess” heat and condensate, but not volatile organic compounds that can condense and build up in sufficient volume to fuel a fire. Because a toaster can make toast “smoke” does not mean a hood is required. Because a steam table produces some vapors does not mean a Type II hood is required. Soup or sandwich warmers, though they may have inputs beyond the limits referred to in this guide do not necessarily need to be hooded, as they are not “cooking”, and the temperatures to which they bring food products are not high enough to generate significant effluent

2. Is ventless equipment listed to UL710B criteria?

This is the objective documentation referred to in 1. At this time UL 710B is the best critical limit we have. Submittals for re-circulating hood systems listed to this standard do not require Type I hoods.

Type II

3. Does process produce fumes, steam, and nuisance odors or the total heat input is greater than 12K BTU/hr or 3.7 KW?

This question deals with fumes (defined as solid particles condensed from the gaseous state), steam and unwanted odors originating from the process. If these cannot be controlled in the space by the HVAC system (question 4 below) a Type II hood may be required. The second part of the question deals with heat equivalents emitted into the space. This is where the "other criteria" referred to in the flow chart becomes critically important. The amount of excess heat generated by a piece of equipment that is warming or holding a food item consists of two variables: latent heat and sensible heat. Latent heat is the amount of heat released when steam makes a phase change to become vapor, or when vapors precipitate. Sensible heat is the heat value represented by a thermometer…it reads the same regardless of relative humidity. If the installation is in a large space, such as a stadium, auditorium, arena or other facility with very high ceilings and large volumes of indoor air, there is no need to vent as there is no hazard of elevating temperature and humidity levels. However, if the space is small, or lacking mechanical ventilation, and or has low ceilings, then a Type II hood may be needed to assure that the heat from the process does not cause the space to become uncomfortable or humidity levels to rise to such as point as to encourage mold growth or ceiling panels to discolor or sag. The critical limits associated with this question are based upon empirical evidence and best guesses from informed industry experts.

4. Can the HVAC system accommodate heat, odor, fumes and steam?

Unwanted odors or fumes may require a Type II hood if the kitchen HVAC system cannot control them within the space. Also, the HVAC system must not allow the relative humidity (RH) within the space to exceed 65% RH at any time. Greater than 65% RH may lead to mold or fungal growth within the space.

"No Hood" Required Qualifiers

Is this a dishmachine?
Under-counter type dishwashers do not require a hood. All others do, unless equipped with an integral ventless system.

Does process produce fumes, steam, and nuisance odors?
"Excess" is defined as comparable amounts relative to other low to medium temperature cooking equipment, such as fryers, griddles, ovens or dish machines.

In every example it is necessary to consider all of the variables that relate to safety. Replacement air is critical to capture and containment of heat and grease-laden vapors. From a mechanical perspective, simply verifying that the makeup air system exists, is wired to the exhaust, and is of sufficient volume to prevent creating a negative pressure in the space is adequate. The commissioning of an exhaust system is critical, as the motors that drive the fans for both exhaust and supply are typically shipped from the manufacturer ready for full speed performance. Engineers specifying fans always select fans with greater horsepower than is necessary to hit their design air volumes, thus, every system MUST be balanced.

From an environmental health perspective, taking care of the mechanical and fire needs is only the beginning. Replacement air diffusers that impinge air onto prep tables and potentially hazardous foods that are being held hot or cold presents a hazard. Turbulence is to be avoided in the kitchen prep area, though it is desirable in the dish room, especially over the clean dish table and over drying racks. Another disconnect between mechanical codes and health codes relates to materials used. The Mechanical Code allows the use of regular steel to form a hood. Health codes require that surfaces be durable and easy to clean, with coving where two planes meet (ANSI NSF Std 2). Thus stainless steel hoods sporting labels for NSF Std 2 listings are needed. In every case,

common sense must be used to gain the best perspective on the potential hazard that the menu, process and the equipment may present in each individual, specific situation. Similarly, the code official needs to check the data plates provided on UL 710 hoods. All hoods that are pre-engineered and listed to UL 710 are required to have data plates that indicate the minimum exhaust and replacement air values that the assembly was built to. Unlisted Type I hoods must follow the prescriptive formulas of the Mechanical Code for exhaust volumes. The 3 inch air barrier requirement where wall mounted hoods abut combustible wall material is a component of their UL 710 listing. Unlisted hoods must be checked to verify that they maintain appropriate distance to combustible requirements, and adequate distances from the bottom edge of their UL listed filters (unlisted filters are not allowed in any Type I application) to cooking surfaces or open flame, as the case may be.

Special Notes

The Minnesota State Fire Marshal has ruled (FMCAP 00-007-I) that the "wood only" stone hearth-style ovens must have all separate, welded Type I ducts. Though they do not require fire suppression systems for surface or duct protection, they do require a hose station be installed so that it has ready access to the oven in the event of fire. All such equipment must be installed pursuant to the manufacturer's installation instructions. Eyebrow hoods are not required as the oven is designed to be at a negative pressure compared to the kitchen. The local code official may also accept class A (NFPA 211) chimneys. Hearth ovens with heavy usage do produce grease-laden vapors and effluent, and their ducts are subject to deposition of grease. An aggressive cleaning schedule may be needed, and it is recommended that an inspection be made after 30 days of use to better determine the required cleaning schedule for safe operation. This cleaning requirement should be part of the food or food service licensee's due diligence master cleaning schedule, and available for review by the Authority Having Jurisdiction upon inspection. The Minnesota Uniform Fire Code (MUFC) requires inspection of such systems and safeguards every 6 months.

Cooking equipment that uses solid fuels such as wood and/or charcoal are required to have a separate hood (or hood sections, dedicated duct collar), duct and exhaust fan. The exception to this is that another piece of cooking equipment can be located beneath the same hood provided it is not a piece that requires surface fire suppression (fryer, griddle, range, braising pan, gas or electric broiler, etc.). All such equipment requires surface fire suppression and duct protection. A single fire system can serve multiple hoods provided they are located in the same fire zone.

The Minnesota State Fire Marshal continues to accept NFPA 13, UL subj. 199B water-based fire suppression cabinets and systems that use Grinnell GEM EA-1, ¼" orifice sprinkler heads for surface fire suppression over fryers and other surface cooking equipment. They will continue to do so until such time as a listed head becomes available.

Commercial Kitchen Appliance Ventilation Flowchart

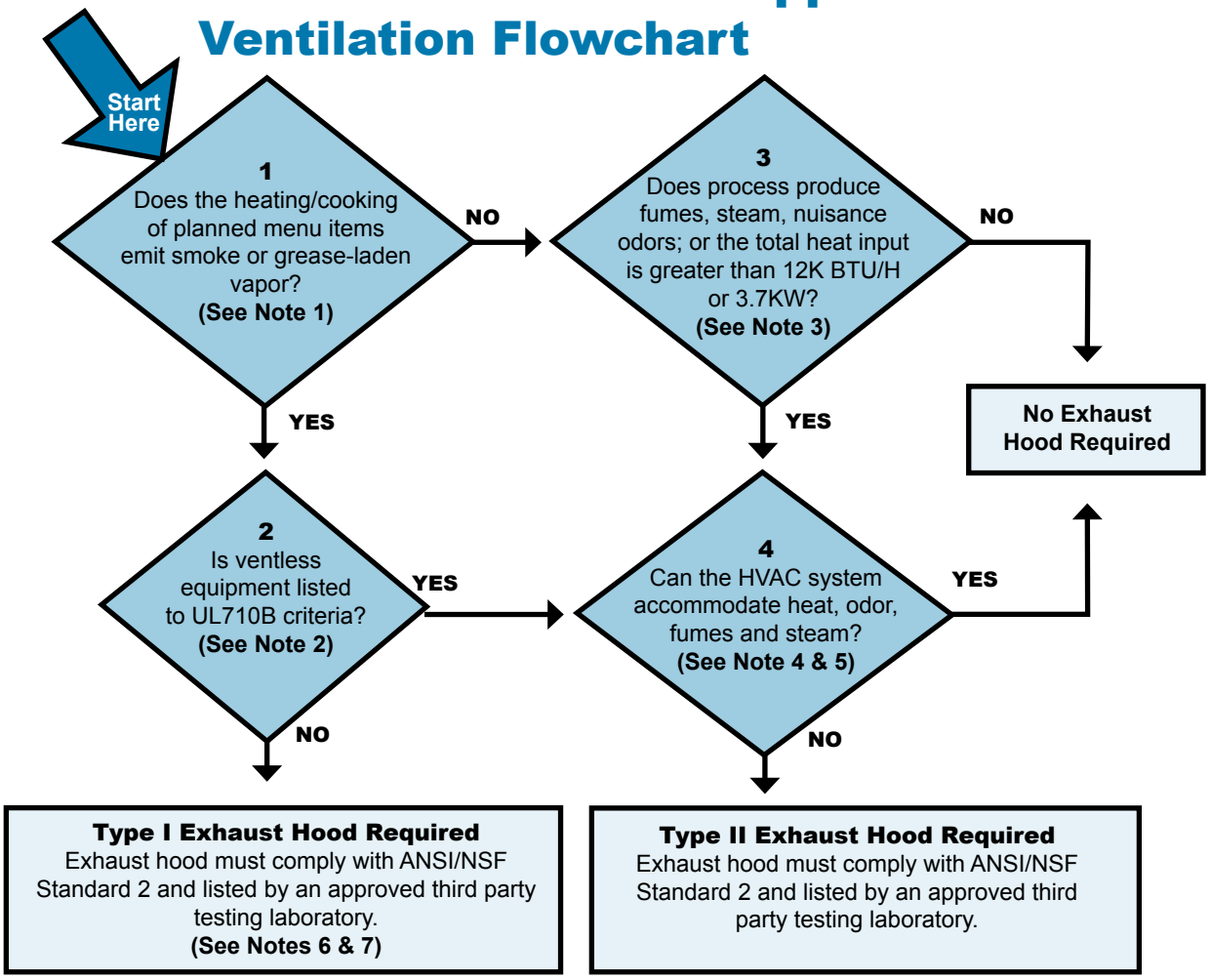

NOTES:

1. The industry standard for measuring grease-laden vapor is EPA test method 202 which measures vapor at an air flow rate of 500 cubic feet per minute (CFM). The maximum test emission rate should not exceed 100 mg/min. (5mg/m^3) of grease vapor. See http://www.epa.gov/ttn/emc/methods/method202.html.

2. UL710B is the industry performance standard for recirculating hood systems for cooking equipment with integral devices for reducing condensable particulate emissions. See http://ulstandardsinfonet.ul.com/scopes/0710b.html.

3. The heat gain of all heating and cooking appliances must be included in the evaluation of the space.

4. The kitchen HVAC system must maintain a continuous relative humidity not to exceed 65%. (ASHRAE 62.1-2004.5.10.1)

5. One must consider Other Criteria* such as whether existing HVAC system has capacity to compensate for heat gain associated with process(es) or multiple units. A professional engineering report may be required by the code official confirming that the building HVAC system has been designed to overcome the heat gain introduced by the cooking appliance(s).

6. Pursuant to Minnesota Building Codes, all Type I hood systems require an automatic fire extinguishing system.

7. Exhaust hood must be UL710 listed or comply with Type I hood requirements in Section 507 of the MN Mechanical Code.

*Other Criteria:
1) Menu/volume (food and equipment),
2) Temperatures and heat gain,
3) Type of fuel,
4) Method of heat transfer
5) Space, HVAC rates, % fresh air (outside)

EQUIPMENT
CATEGORIES

The purpose of listing these examples is to provide a basic description of various kinds of food equipment, applications for their use, and information on ventilation. This information does not consider the type of fuel used (electric, gas, solid), which may be included in some of the equipment examples. Ventilation considerations for different types of fuel are specifically addressed in other sections of these guidelines. Definitions for the terms used in this section can be found on pages 8-10 (Ventilation Terms and Definitions). The listing of equipment is not an endorsement of any company, manufacturer or model number. The IARC appreciates the assistance of the equipment manufacturers who graciously provided the photos for these guidelines.

Commercial Kitchen Foodservice Equipment

1. Broilers 55
2. Fryers 57
3. Griddles/Grills 58
4. Hot Plates 60
5. Kettles 61
6. Ovens 63
7. Ranges 69
8. Rethermalizers 71
9. Roasters 73
10. Slow Cookers 74
11. Smokers 75
12. Solid-Fuels 76
13. Steamers 77
14. Ventless 78
15. Warmers 79
16. Woks 81
17. Miscellaneous 82
18. Dishmachines 84
19. Unique Applications 86

Note: Always follow manufacturer's installation instructions and install in accordance to the conditions of its listing.

TYPICAL APPLICATION

Imparts flame broiled taste and aroma to meats and poultry. Other uses include broiling, toasting, browning and finishing of vegetables, raw meats, chicken (without skin) and sandwiches. Overfired means the burners are located at the top and radiate their heat downward. Underfired has a heat source that is located beneath the food being cooked. Salamander is for reheating finished product and also low volume broiling. Cheese melter is for browning and melting toppings

HOOD AND EXHAUST SYSTEM

Type I system due to the high grease production from the typical food items. A Type II system may be used for a cheese melter.

Upright Broiler
Type: Overfire

Countertop Char-Broiler (on table)
Type: Underfire

Floor Mounted Char-Broiler
Type: Underfire

Wall Mounted Salamander
Type: Overfire

Wall Mounted Cheese Melter
Type: Overfire

TYPICAL APPLICATION

This equipment is used for fast frying by cooking rapidly and uniformly for foods. This is generally used for all types of fried foods with a high grease output. Information about ventless fryers can be found on page 30.

HOOD AND EXHAUST SYSTEM

Type I system.

Countertop Fryer

Floor Mounted Fryer

Pressure Fryer

TYPICAL APPLICATION

This equipment is for fast cooking and the griddle size and type are determined by the menu items and production volume. This equipment is typically used for eggs, bacon, pancakes, fish, tortilla shells, sandwich toasting, and is ideal for meats, fish and chicken.

HOOD AND EXHAUST SYSTEM

Type I system with high to medium grease production based upon the menu. A single Panini grill used for low volume sandwich toasting in a properly ventilated space may not need an exhaust hood. Multiple or double Panini grills may require a Type I system hood depending on menu, meal volume and HVAC system.

Floor Mounted Griddle

Small Countertop Griddle

Large Countertop Griddle

Panini Grill

Combination Countertop Griddle (clamshell)

HOTPLATES
FOUR

TYPICAL APPLICATION

This equipment is used for general cooking and can be located in areas of limited space, yet be capable of producing a wide range of menu items. Typical applications for its use includes sautéing, pan broiling, stewing and pan frying.

HOOD AND EXHAUST SYSTEM

Type I or Type II system, or no hood required based on the menu items or heat production. A hood may not be required for a single unit electric (single or double burner) hotplate, with no grease production such as reheating or boiling soup in a bag, when there is adequate room exhaust ventilation.

Electric Hotplate (Single Burner)

Electric Hotplate (Double Burner)

Induction Cooktop

Gas Hotplate

TYPICAL APPLICATION

Kettles offer the advantage of one pot cooking for speed and consistency. Low temperatures allow for simmering foods while high heat settings braise meats and quickly bring foods to a rapid boil. Typical use for this equipment includes soups, stews, vegetables, puddings, sauces, pasta and braising meats.

HOOD AND EXHAUST SYSTEM

Typically a Type II system is needed for low to no grease production, based on the food items. A Type I system is required for braising pan/tilting fry pan/tilting skillet because it can be used for frying or grilling.

Tilting Braising Pan/Tilting Fry Pan/ Tilting Skillet

Self Contained Non-Tilting Steam Kettle

Floor Mounted Tilting Kettle

Steam Jacketed Cooker/ Mixer

Countertop Tilting Steam Jacketed Kettle

TYPICAL APPLICATION

Convection ovens provide multi-purpose cooking capabilities, cook food faster at lower temperatures, and heat foods uniformly. These types of ovens provide fast, uniform and moist cooking with low product shrinkage. These types of ovens and combination ovens typically are used for vegetables, lasagna, rolls, cakes, seafood, baked goods, roasting meat, baking potatoes, pastries, and processed food products.

HOOD AND EXHAUST SYSTEM

A Type I or Type II system is required based on the menu items. For example, roasting of meat products, lasagna, etc. would require a Type I system. Combi ovens require an extra-deep hood above to capture moisture when the door is opened.

Combination Oven/Steamer

Roll-in Combination Oven/Steamer

Double Deck Convection Oven

Countertop Convection Oven

Single Full Size Convection Oven

TYPICAL APPLICATION

Ovens are typically used for cooking, baking or reheating food products such as pizzas, frozen and fresh baked goods, cookies, muffins and meat. Rack ovens are revolving ovens that are typically used for baking in a high volume facility.

HOOD AND EXHAUST SYSTEM

A Type I hood system is needed when roasting meats; Type II hood system may be allowed depending on the food menu and volume such as for bakery type items. The small countertop, may not require an exhaust hood. Revolving or rotary rack ovens are vented in accordance with the manufacturer's instructions and the MN Mechanical Code. A gas flue located at the top of the rotary revolving ovens exhausts the products of combustion, an eyebrow hood installed above the door captures the heat when the door is open. A stone hearth oven may not require a Type I hood if the building roof is immediately above the oven and the AHJ does not require a fire protection system.

Small Countertop Oven

Stone-Hearth Display Oven

Rotary Rack Oven

Revolving Deck Oven

TYPICAL APPLICATION

These ovens are found in retail convenience stores, fast food and specialty food service establishments. Typical applications for these ovens range from breads and pastries to pizza, frozen entrees, casseroles, meats and sandwiches.

HOOD AND EXHAUST SYSTEM

A Type I hood system is required for the floor mounted oven, except that a Type II may be allowed if the oven is used only for bread and pastry products. A Type I or II hood is required for a countertop conveyor oven depending on menu and volume.

Conveyor Oven/Toaster

Countertop Conveyor Oven

Floor Mounted Conveyor Oven

TYPICAL APPLICATIONS

These ovens range from a single drawer small oven intended for small volume baking in a compact work area to the larger models allowing a greater variety of items to be cooked or baked. The drawer type deck oven is used for pizzas and cookies while the larger ovens allow for cooking or baking of pizzas (high volume), casseroles, baked potatoes, poultry and seafood. A Tandoor oven is an ethnic clay pot style cooking device, either gas or charcoal fired.

HOOD AND EXHAUST SYSTEM

A electric countertop oven requires area exhaust, but not a hood. A Type I or II system is needed for ovens based upon the menu and the size of the oven installed. For the Tandoor oven, a separate Type I hood system is required if solid fuel is used (see Solid Fuel Equipment Section). The drawer type countertop oven does not require a hood; however, for multiple units, a hood may be required based on volume and the existing HVAC system. For all solid fuel cooking equipment, the hood and duct systems must be separate from other exhaust systems.

Electric Countertop Oven (drawer type)

Electric Countertop Double Deck Oven

Single Deck Oven—Floor Mounted

Tandoor Oven (cut away)

TYPICAL APPLICATION

These types of ovens are used for rapid cooking of small portions, such as sandwiches and pizzas.

HOOD AND EXHAUST SYSTEM

No hood system is required if the equipment is tested to UL 710B and listed for ventless operation, AND adequate room exhaust ventilation is present. Without proper ventilation, a minimum of a Type II hood is required. Multiple units require evaluation to determine if a Type II system is required (refer to flowchart).

Hybrid Convection Impingement Oven with Catalytic Converter

Impingement/Microwave Oven with Catalytic Converter

Convection Microwave Oven

Convection Radiant Microwave Oven with Catalytic Converter

TYPICAL APPLICATION

Hot tops are designed to cook and heat foods through a total heat range. The center of the hot top is for fast boiling, the outer edge is for simmering. Combination cooking units provide char-broiler/hot tops and open burner use provide high heat output when all units are in use. Ranges are typically used for candies, soups, and heating or cooking at a rapid boil.

HOOD AND EXHAUST SYSTEM

Type I hood system.

Medium Duty Counter Top Range

Stock Pot Range

Graduated Hot Top Range

Medium Duty Range

Heavy Duty Range

TYPICAL APPLICATION

Reheating of previously prepared or cooked foods. Typically used for a variety of items including: soups, meats, entrees, vegetables, rice, and pasta.

HOOD AND EXHAUST SYSTEM

A Type II system is required to remove steam and odor for the floor mounted pasta unit and possibly the rethermalizer cabinet. The round warmer or countertop rethermalizer/steamer would not require a hood.

Rectangular Cooker/Warmer

Round Cooker Warmer

Rethermalizer Cabinet

Counter Top Rethermalizer Steamer

Floor Mounted Pasta Rethermalizer

TYPICAL APPLICATION

This equipment is used for roasting fowl or roasts, in a restaurant and in the deli of a grocery store. Once cooked, the food is then typically held hot in a retail display case.

HOOD AND EXHAUST SYSTEM

Type I hood system is required.

Floor Mounted Rotisserie	Countertop Large Capacity Rotisserie

TYPICAL APPLICATION

This type of equipment cooks slowly at low temperatures, thereby retaining moisture, and holds food hot until served (cook and hold use). Based on the low temperatures, there is very low to no grease production. Examples of food products include beef, turkey and pork.

HOOD AND EXHAUST SYSTEM

Area room exhaust needed for a single unit installation and a Type II hood system may be required for installation of multiple units, based upon the menu.

Double Stacked Cook and Hold Oven	Single Stacked Cook and Hold Oven

TYPICAL APPLICATION

This type of equipment is used for specialty cooking, smoking and glazing, which imparts a smoked flavoring into the product. Typical application includes prime rib, ham, pork, sausage, fish, whole chicken and duck products.

HOODS AND EXHAUST SYSTEM

This equipment must be vented in accordance with the manufacturer's listing and instructions, and comply with the MN Mechanical Code (stack vent outlet to the outdoors). A Type I hood system is required on a portable smoker where no vent outlet (to the outdoors) is present on the equipment.

Single Door Smoker Oven

Double Door Smoker Oven

Floor Smoker Oven with Stack

TYPICAL APPLICATION

This equipment is used for baking, grilling and roasting food items such as chicken, beef, pork or pizza with solid fuel (wood, charcoal).

HOOD AND EXHAUST SYSTEM

This type of equipment requires a dedicated Type I system, based on the high heat and grease production. In addition, an exhaust hood and duct must be separate from other cooking appliances according to the MN Mechanical Code. Refer to the Solid Fuels Section in the Guidelines.

Wood-Fired Stone-Hearth Oven

Log Charbroiler

Solid Fuel Rotisserie Charbroiler

TYPICAL APPLICATION

This equipment is used for reheating and cooking where no browning occurs, and emits steam into the room.

HOOD AND EXHAUST SYSTEM

A Type II system for low to no grease production based upon the menu.

Countertop Steamer

Floor Mounted Pressureless Steamer

TYPICAL APPLICATION

This equipment provides uniform, fast cooking with high moisture retention, and is used for fried foods, popcorn and pizza.

HOOD AND EXHAUST SYSTEM

Type I ventless system must be approved for installation from the local building official. The ventless system must be listed to UL 710B, with fire protection and adequate room ventilation required. If adequate room ventilation is not present, a Type II exhaust hood system is required (see Recirculation Section).

Ventless Fryer

Ventless Pressure Fryer

TYPICAL APPLICATION

This equipment is designed to hold cooked food at the required temperature and is used for a large variety of foods.

HOODS AND EXHAUST SYSTEM

None required. Note: A bainmarie (open large water filled steam well) requires a Type II hood system.

Free Standing Drawer Warmer

Undercounter Warmer

Countertop Heated Display Cabinet

Cheese Warmer

Built-in Warmer

Countertop Invisible Warmer

Round Stone Warmer

Countertop Stone Warmer

Countertop Warmer

Hot Food Table

TYPICAL APPLICATION

This equipment is for fast cooking, high moisture food products and typically used for stir fry and saute.

HOOD AND EXHAUST SYSTEM

Type I system due to high heat and grease production.

Floor Mounted Wok Range

Induction Countertop Wok Range

TYPICAL APPLICATION

This equipment is designed for low temperature and low volume cooking, and the food produced is based upon the design of the equipment.

HOOD AND EXHAUST SYSTEM

A hood would not be required unless multiple units are used and the normal room ventilation is inadequate. If this is the case, additional room air exhaust or an exhaust hood may be needed, such as an air type popcorn popper (heat removal).

Waffle Maker

Electric Rice Cooker

Crepe Maker

TYPICAL APPLICATION

This equipment is designed to hold cooked food at the required temperature and used for a large variety of foods.

HOODS AND EXHAUST SYSTEM

A large popcorn popper (e.g. theater style) or popcorn kettle using oil typically requires a Type I system based upon the volume and cooking medium. Vertical broiler would require a Type I system.

Countertop Popcorn Machine

Large Popcorn Machine

Hotdog Roller Grill

Vertical Broiler

TYPICAL APPLICATION

There is a wide variety of this type of equipment depending on space, volume and use. For example, in a beverage type of establishment, a glass washer may be more appropriate versus a pot and pan washer used in a bakery operation. Typical use includes the cleaning of glassware in a bar, or dishes, flatware, pots/pans and utensils. The method for proper cleaning of equipment and utensils is accomplished by either chemical or hot water (booster heater).

HOOD AND EXHAUST SYSTEM

A hood would not be required for a glasswasher or undercounter dish machine; a Type II hood system or Type II Duct system would be required for upright dish machines. A Type II Duct system is typically located on pot/pan, conveyor or flight type dish machines.

Glasswasher

Undercounter

Flight Type Dishmachine

Upright Dishmachine
TYPE: Chemical or Hot Water

Pot/Pan Machine

Conveyor Dishmachine

VENTILATED CEILING

Special designed hood concealed above the ceiling to properly ventilate cooking equipment. Used in display of kitchen applications exposed to customer view.

VARIABLE EXHAUST SYSTEM

For use in Type I exhaust hoods to save energy by sensing heat load from cooking appliances, thereby increasing or decreasing exhaust fan speed based of cooking volume.

Ventilation Committee

of the

Inter-Agency Review Council

FOURTH EDITION